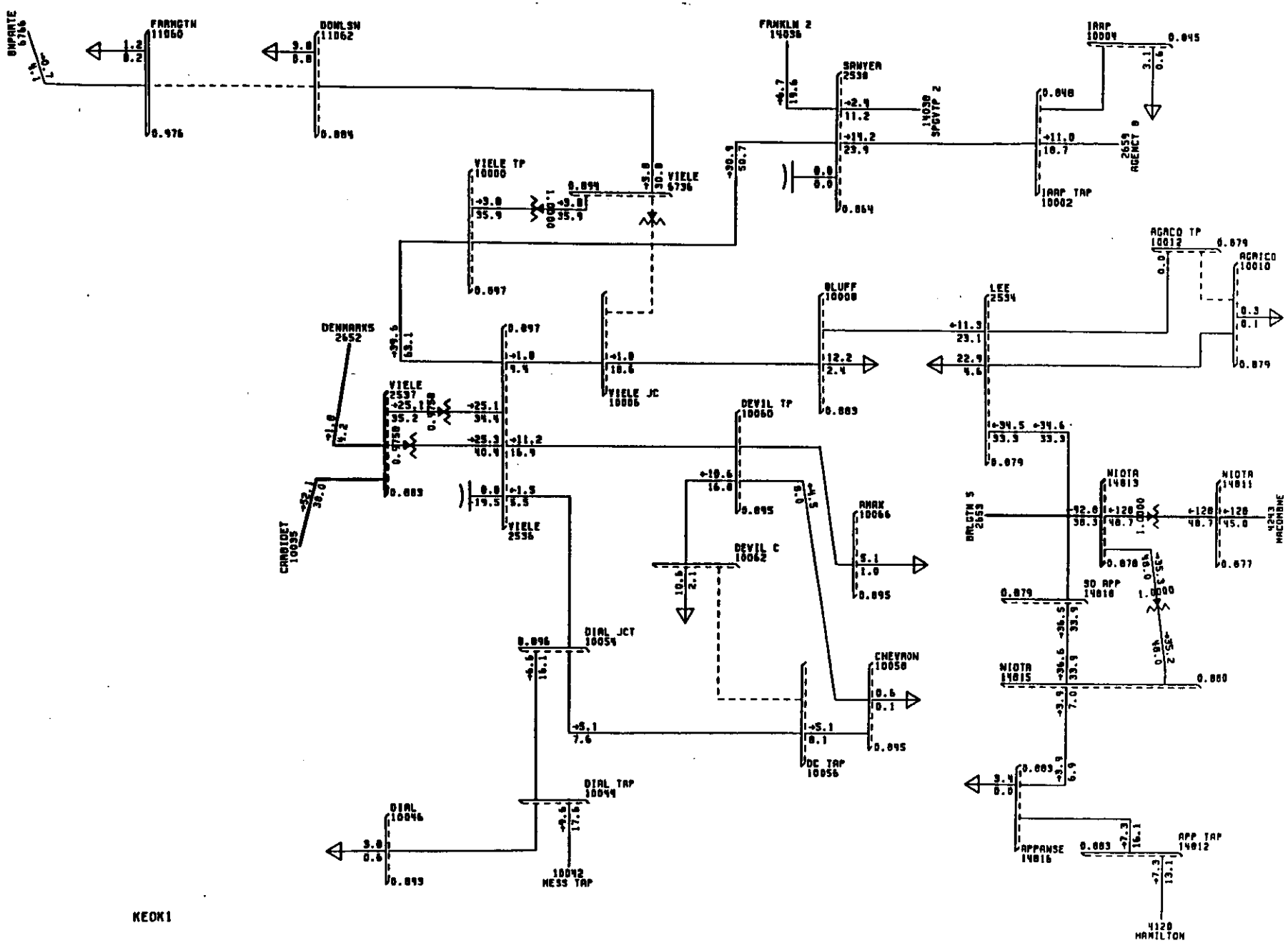

2006B 69KV PLAN
CONT 7: BGS OUTAGE
FRI, JUN 02 1995 16:08

100% RATER
0.925UV 1.060 OV
KV: ≤72 ,≤141 ,≤167

BUS - VOLTAGE (PU)
BRANCH - MW/% OF RATE A
EQUIPMENT - MW/MVAR

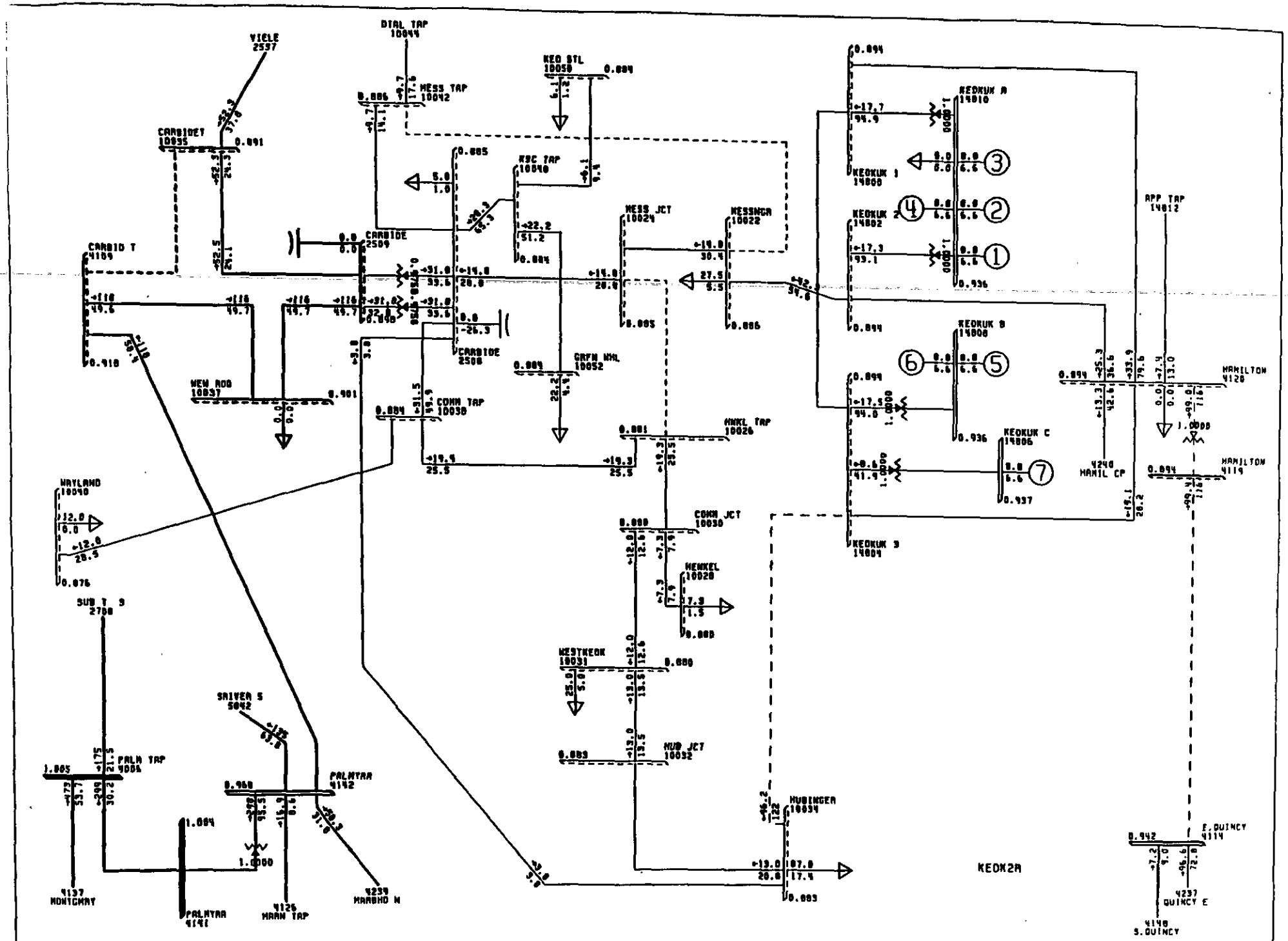

2006B 69KV PLAN
CONT 7: BGS OUTAGE

100% RATEA
0.925UV 1.060 OV
KV: ≤72 ≤141 ≤167

BUS - VOLTAGE (PU)
BRANCH - MW/% OF RATE A
EQUIPMENT - MW/MVAR

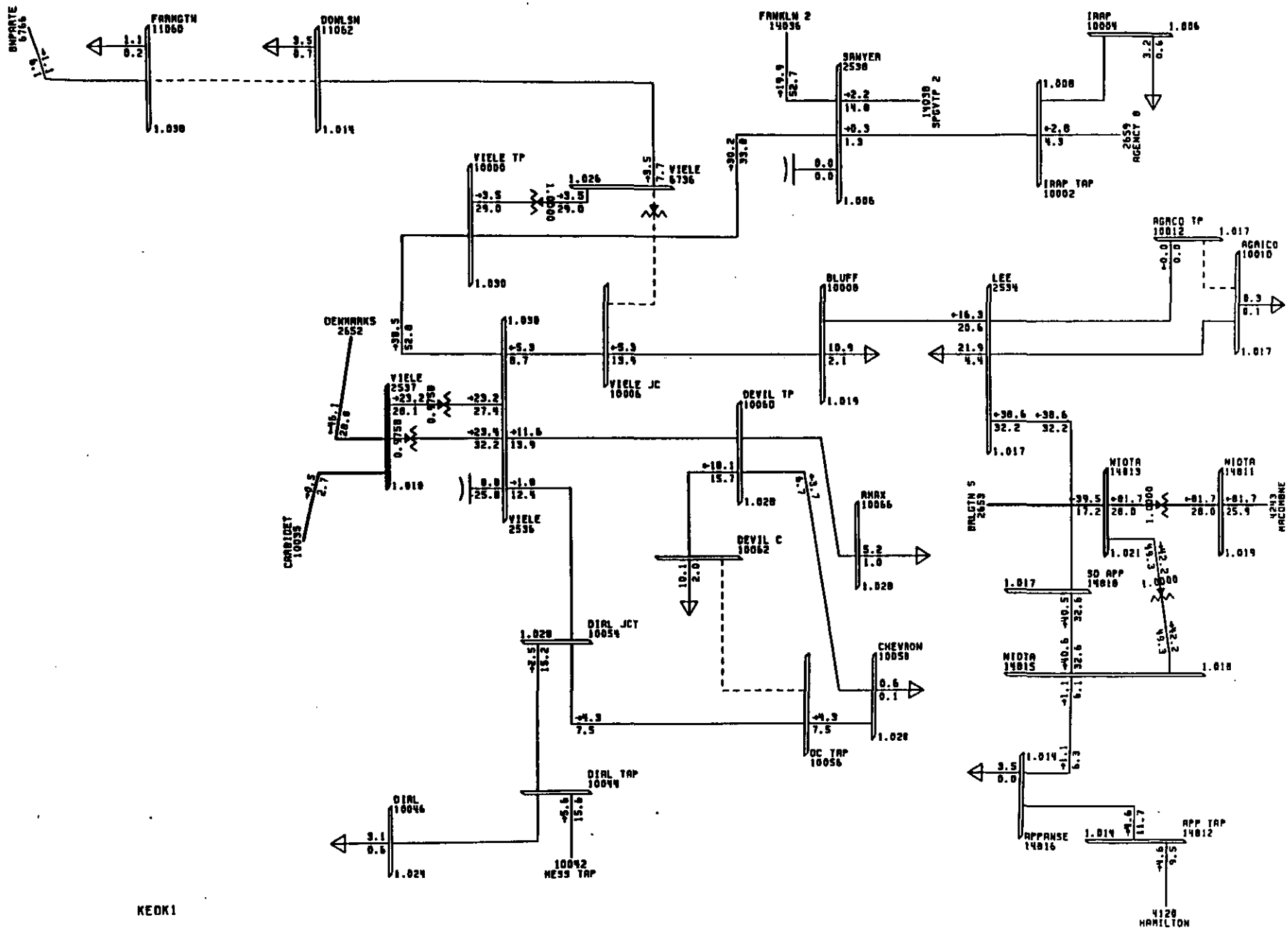

1998B 161KV PLAN, NEW CARB-MESS LINE, 24.3MVAR BGS
BASE CASE
EDT JUN 02 1995 16:03

100% RATER
0.925UV 1.060OV
KV:≤72 ,≤141 ,≤167

BUS - VOLTAGE(PU)
BRANCH - MW/% OF RATE A
EQUIPMENT - MW/MVAR

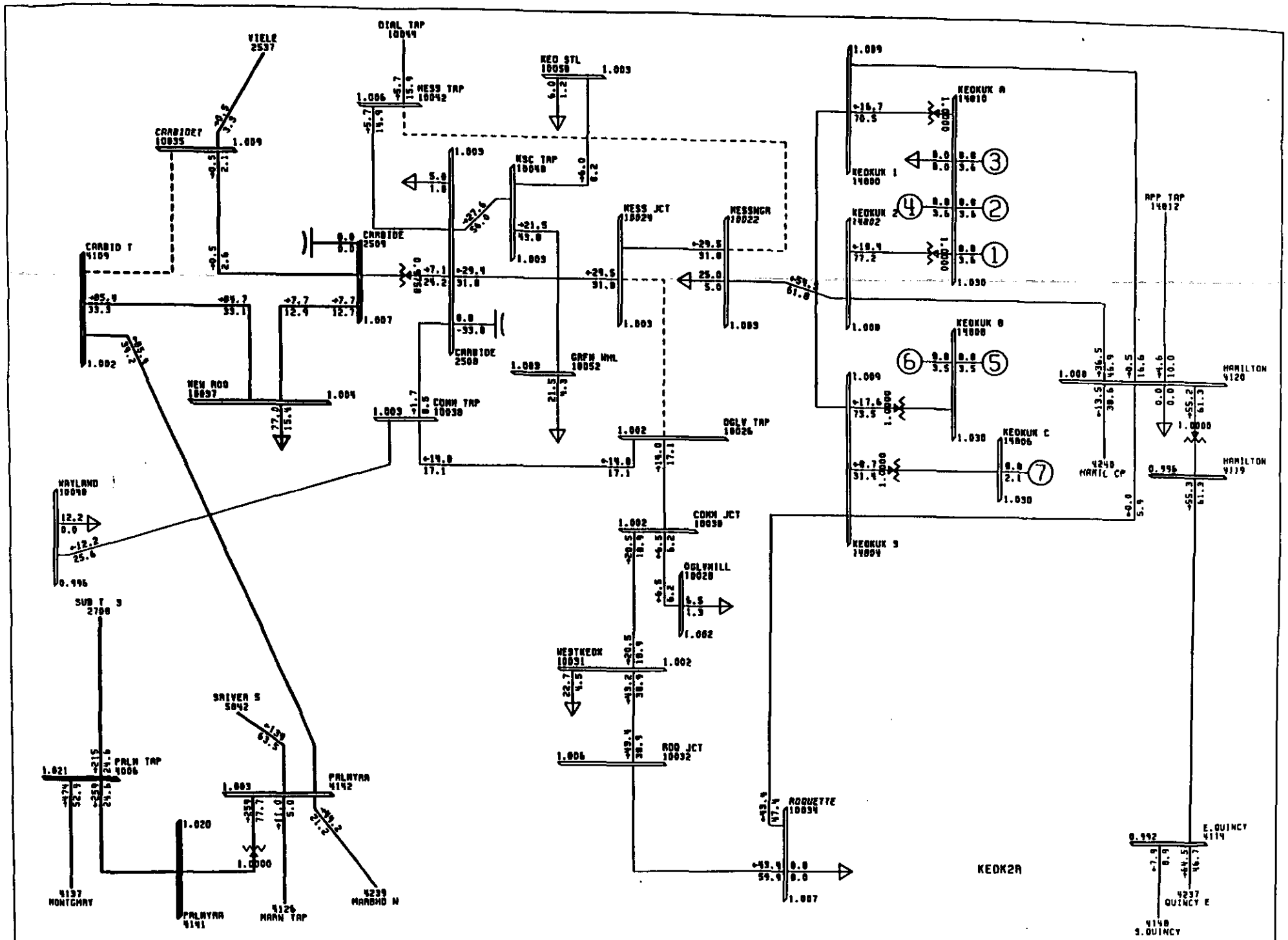

1998B 161KV PLAN, NEW CARB-MESS LINE, 24.3MVAR BGS
BASE CASE

100% RATEA
0.925UV 1.060OV

BUS - VOLTAGE(PU)
BRANCH - MW/% OF RATE A
EQUIPMENT - MW/MVAR

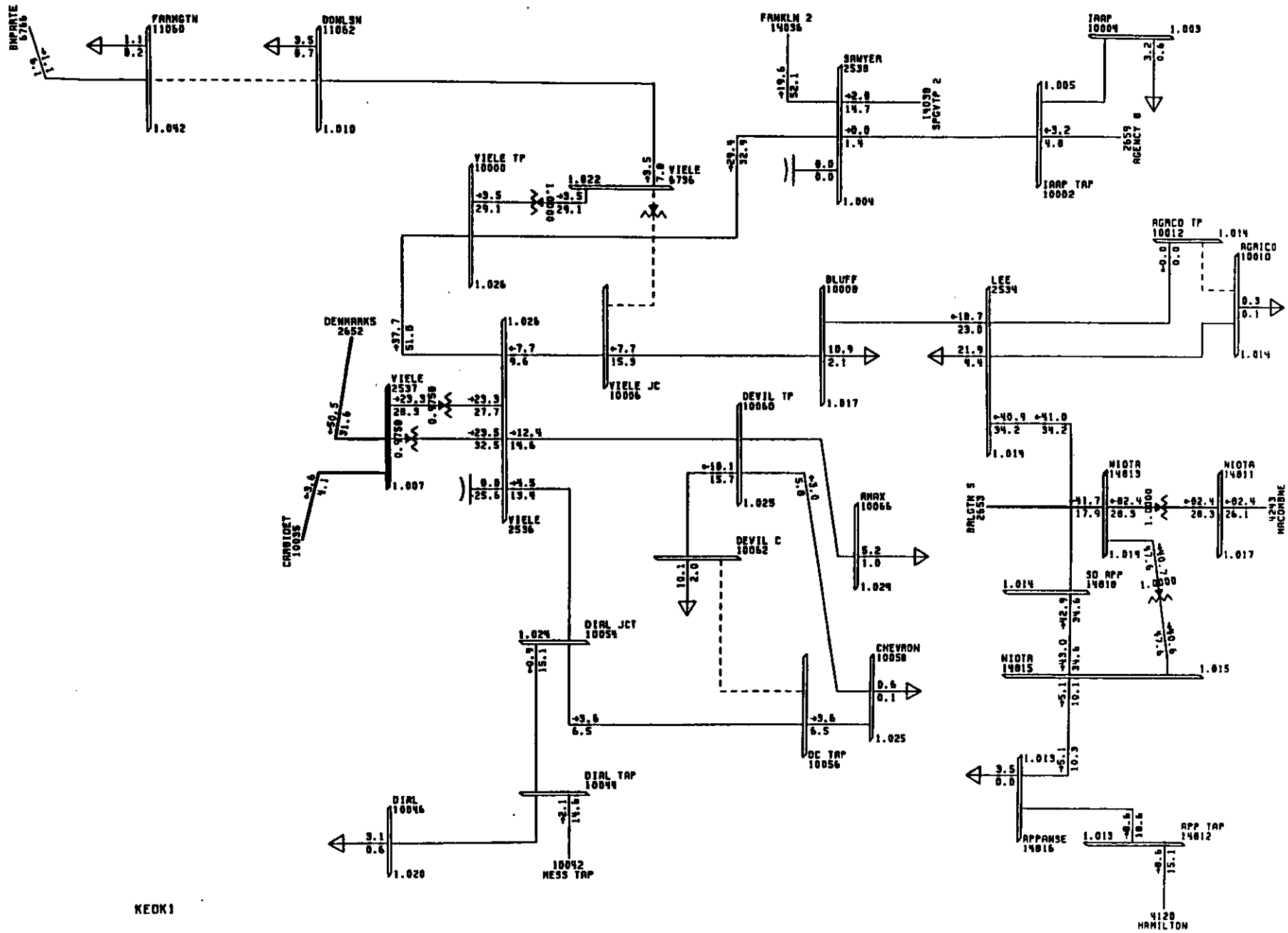

1998B 161KV PLAN, NEW CARB-MESS LINE, 24.3MVAR BGS
CONT 1: LOSS OF NEW HYDRO-ROQUETTE LINE
FRI, JUN 02 1995 16:03

100% RATEA
0.925UV 1.060 OV
KV: ≤72 ,≤141 ,≤167

BUS - VOLTAGE (PU)
BRANCH - MW/% OF RATE A
EQUIPMENT - MW/MVAR

POWER TECHNOLOGIES, INC.

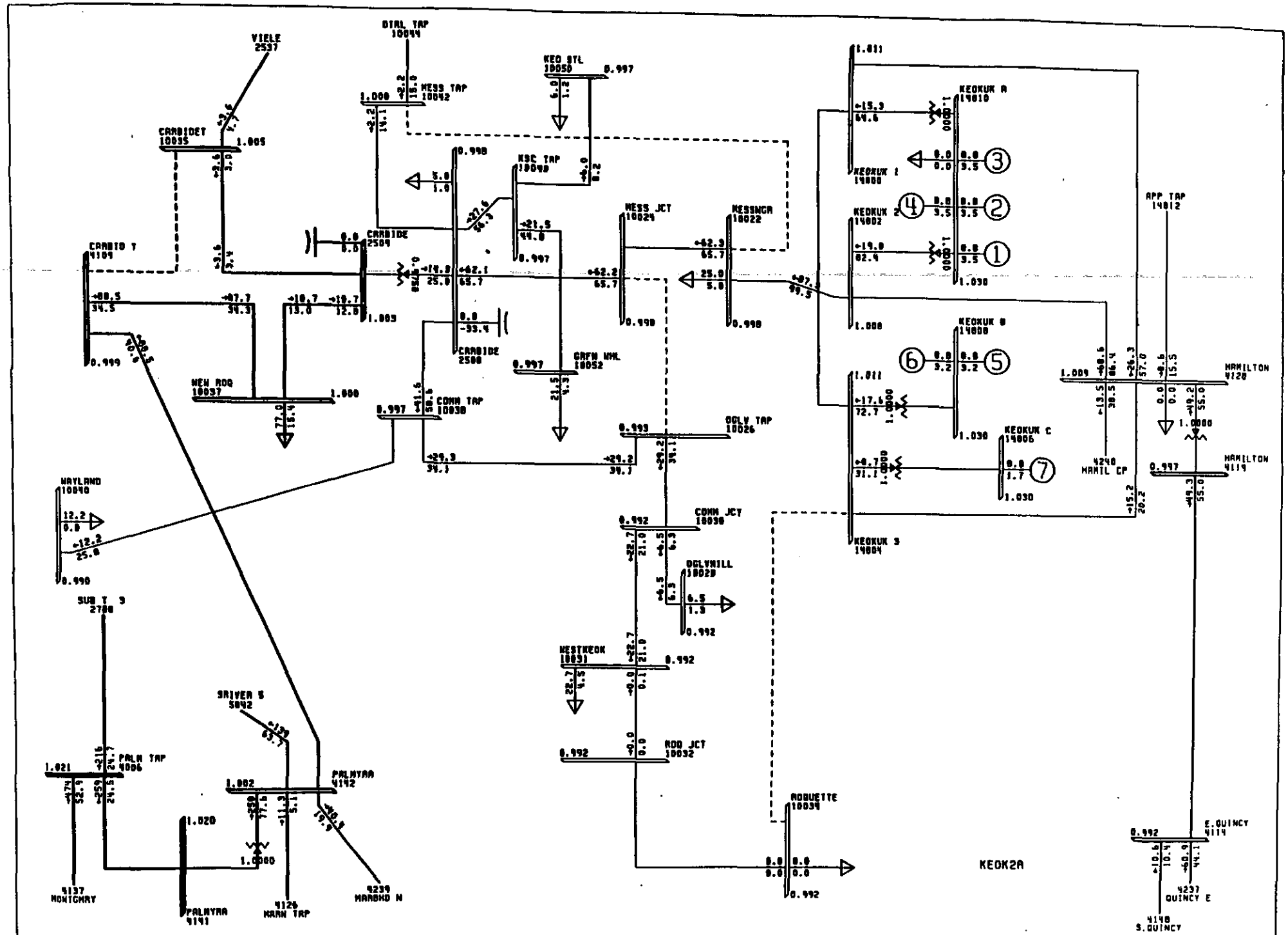

1998B 161KV PLAN, NEW CARB-MESS LINE, 24.3MVAR BGS
CONT 1: LOSS OF NEW HYDRO-ROQUETTE LINE

100% RATEA
0.925UV 1.060OV

BUS - VOLTAGE (PU)
BRANCH - MW/% OF RATE A

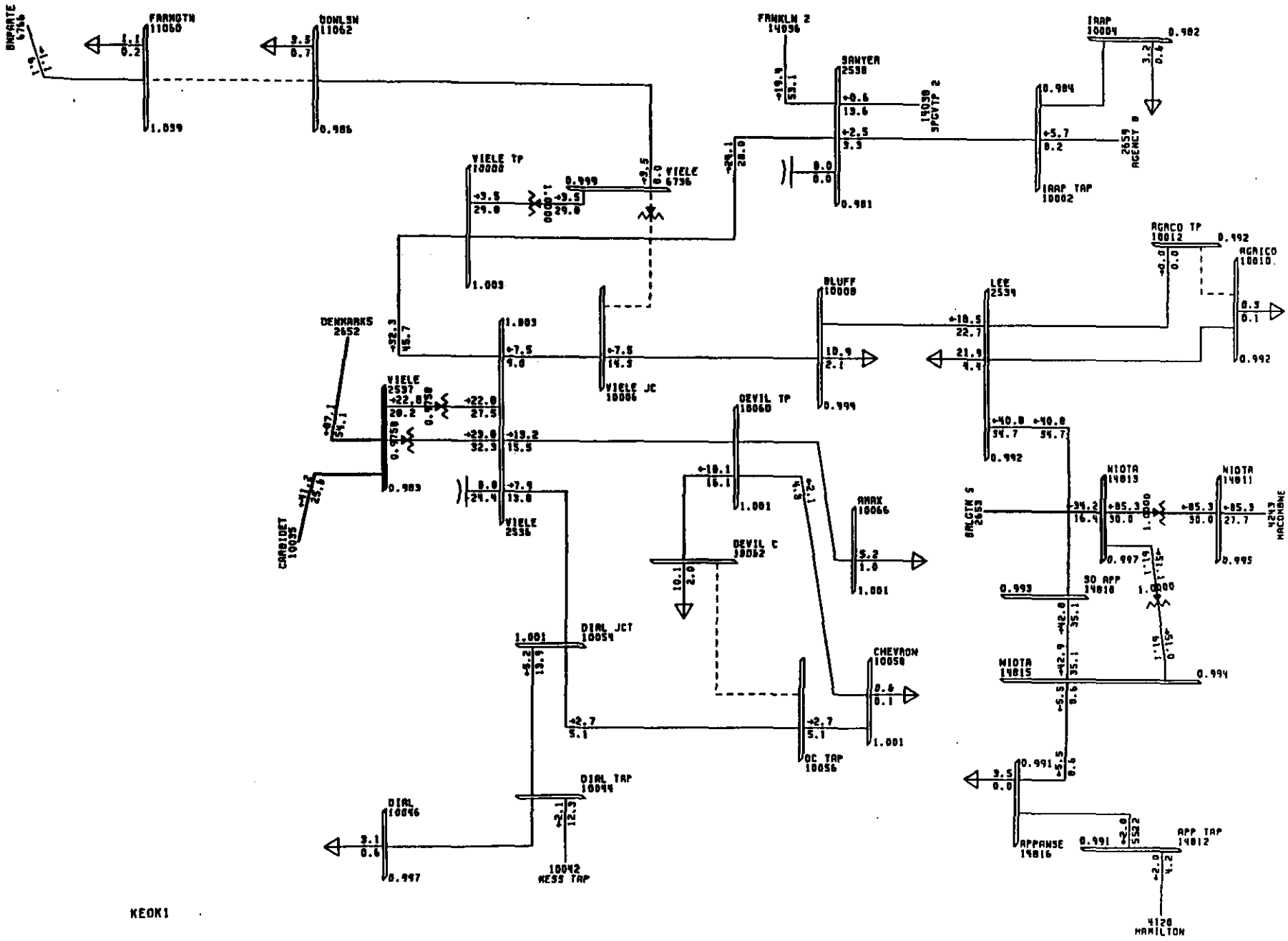

1998B 161KV PLAN, NEW CARB-MESS LINE, 24.3MVAR BGS
CONT 2: LOSS OF PALMYRA 345/161
CDT, JUN 02 1995 16:04

100% RATEA
0.925UV 1.060OV
KV: ≤72 ,≤141 ,≤167

BUS - VOLTAGE (PU)
BRANCH - MW/% OF RATE A
EQUIPMENT - MW/MVAR

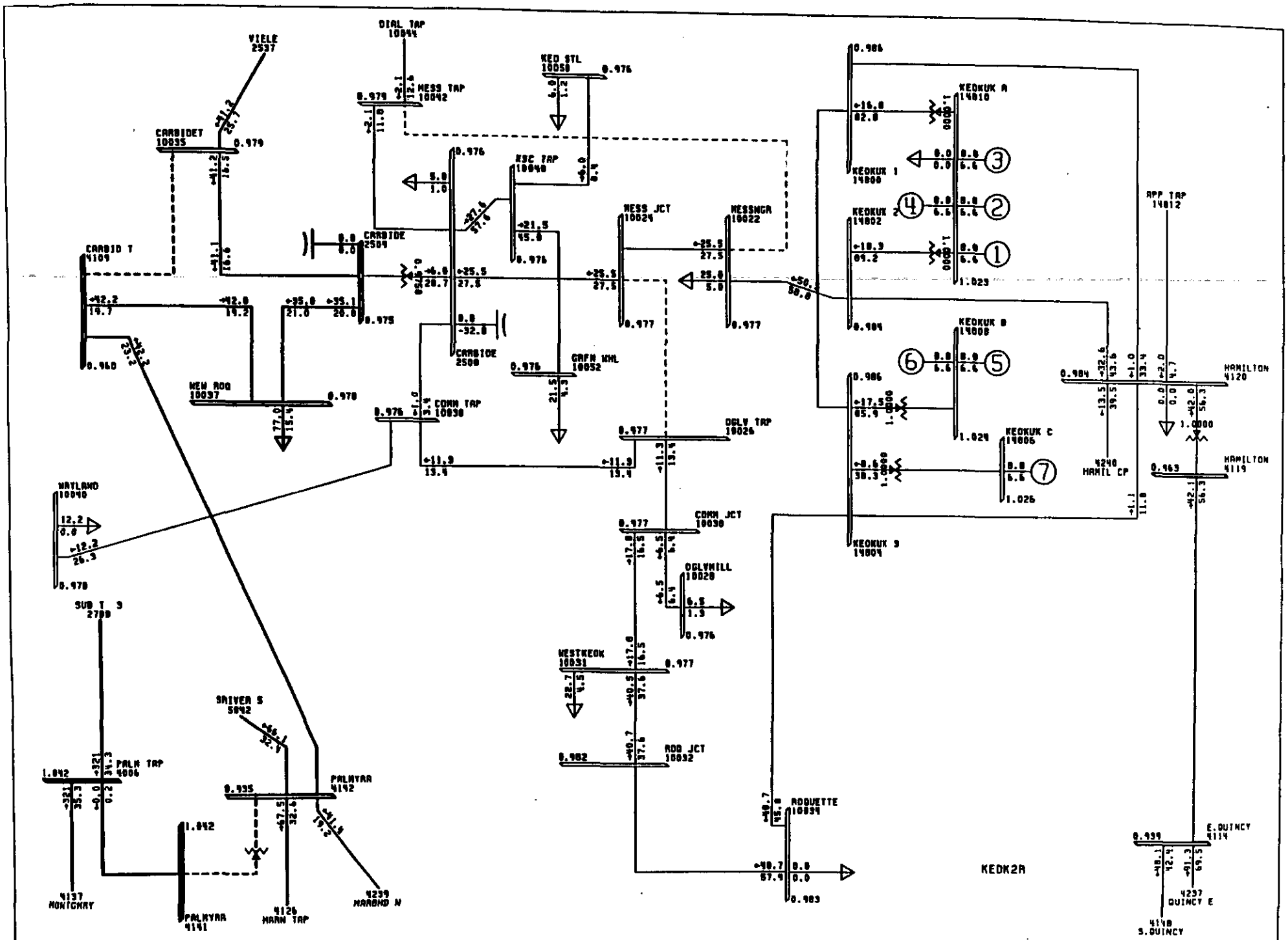

1998B 161KV PLAN, NEW CARB-MESS LINE, 24.3MVAR BGS
CONT 2: LOSS OF PALMYRA 345/161

100% RATEA
0.925UV 1.060 OV
KV

BUS - VOLTAGE (PU)
BRANCH - MW/% OF RATE A
EQUIPMENT - MW/MVAR

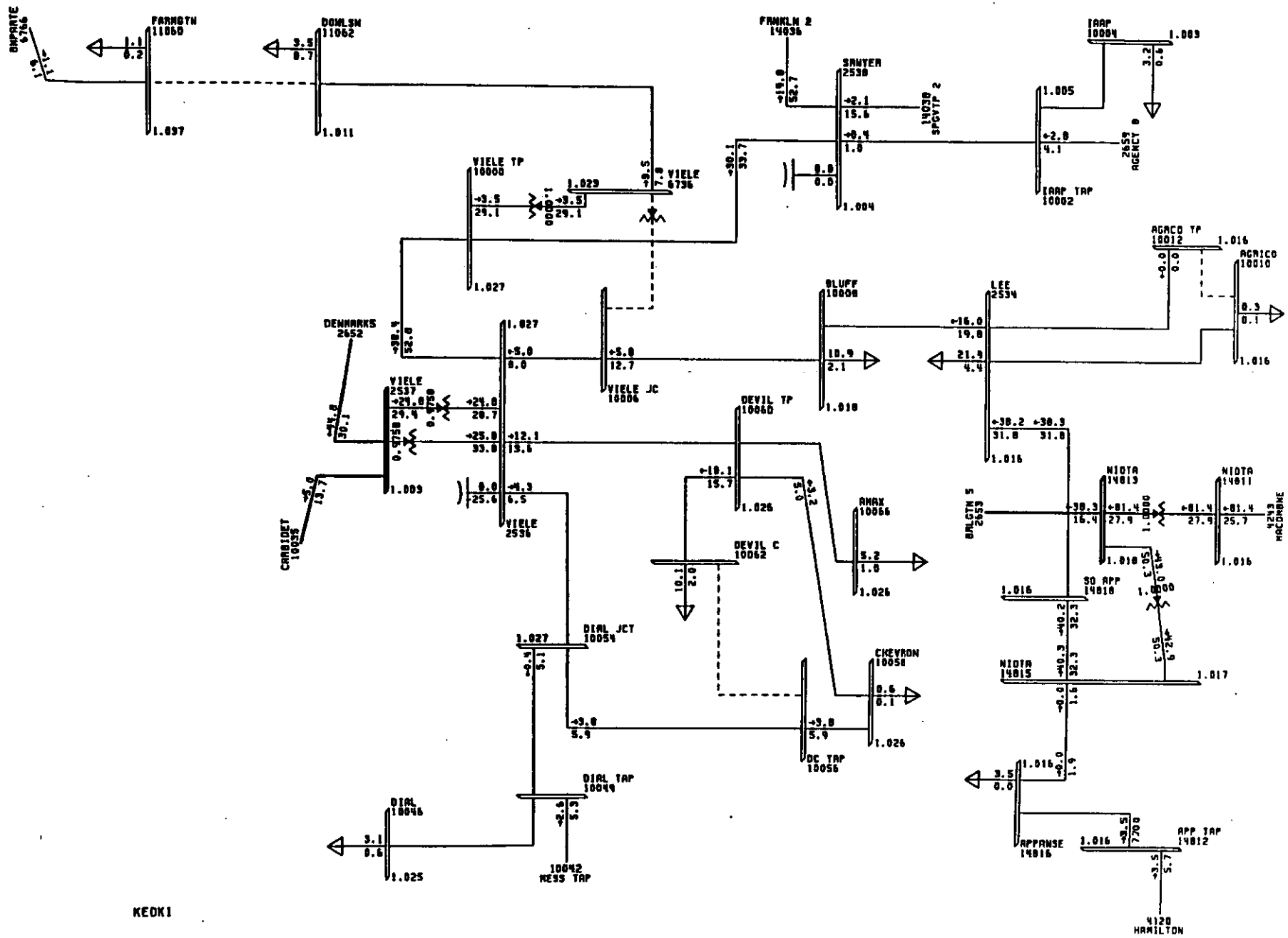

POWER TECHNOLOGIES, INC.	1998B 161KV PLAN, NEW CARB-MESS LINE, 24.3MVAR BGS CONT 3: LOSS OF CARBIDE XFMR FRI, JUN 02 1995 16:04	100% RATEA 0.925UV 1.060 OV KV: ≤72 , ≤141 , ≤167

BUS - VOLTAGE (PU)
BRANCH - MW/% OF RATE A
EQUIPMENT - MW/MVAR

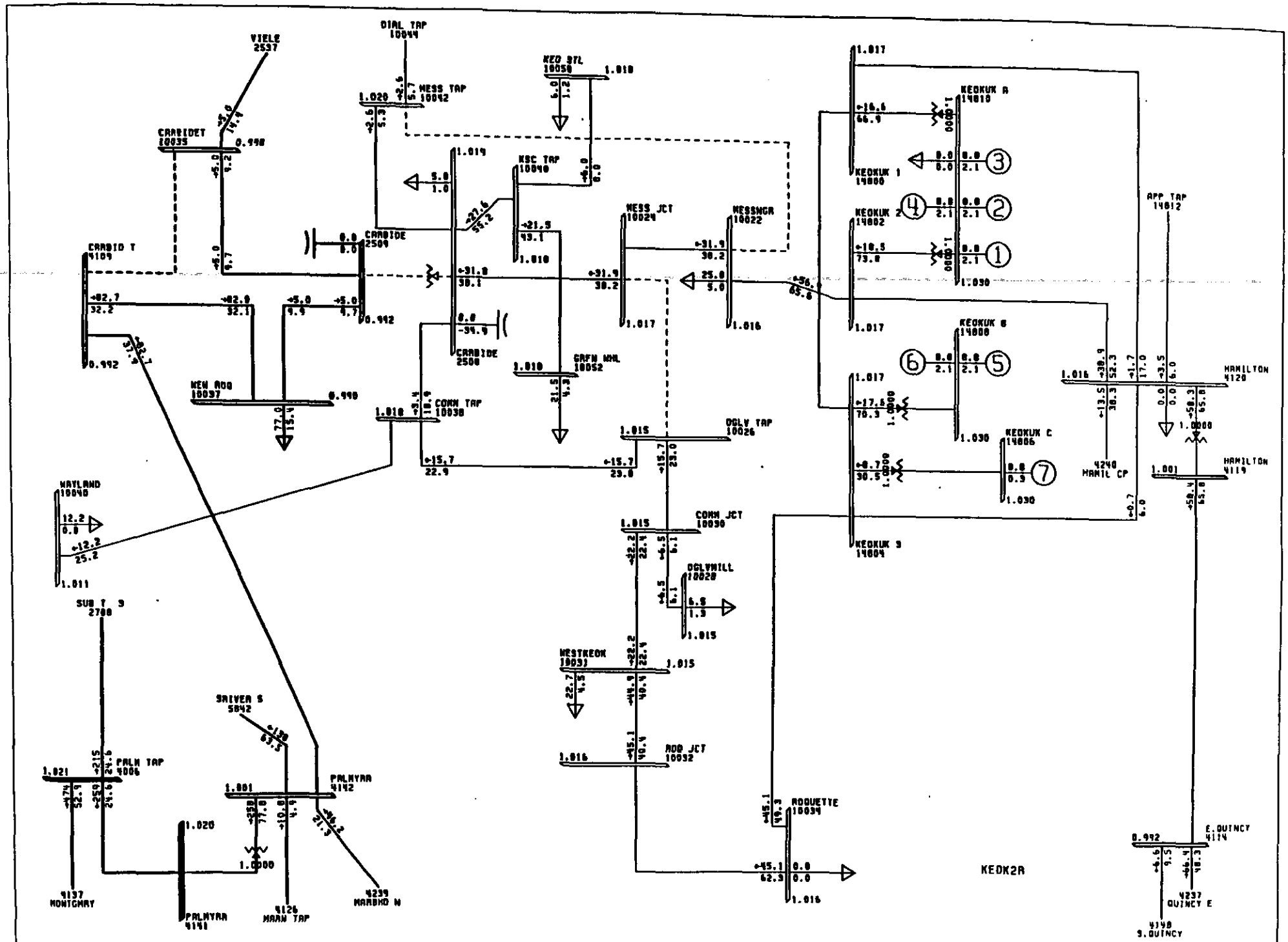

1998B 161KV PLAN, NEW CARB-MESS LINE, 24.3MVAR BGS
CONT 3: LOSS OF CARBIDE XFMR

100% RATEA
0.925UV 1.060 OV
KV: 138 161 167

BUS - VOLTAGE (PU)
BRANCH - MW/% OF RATE A
EQUIPMENT - MW/MVAR

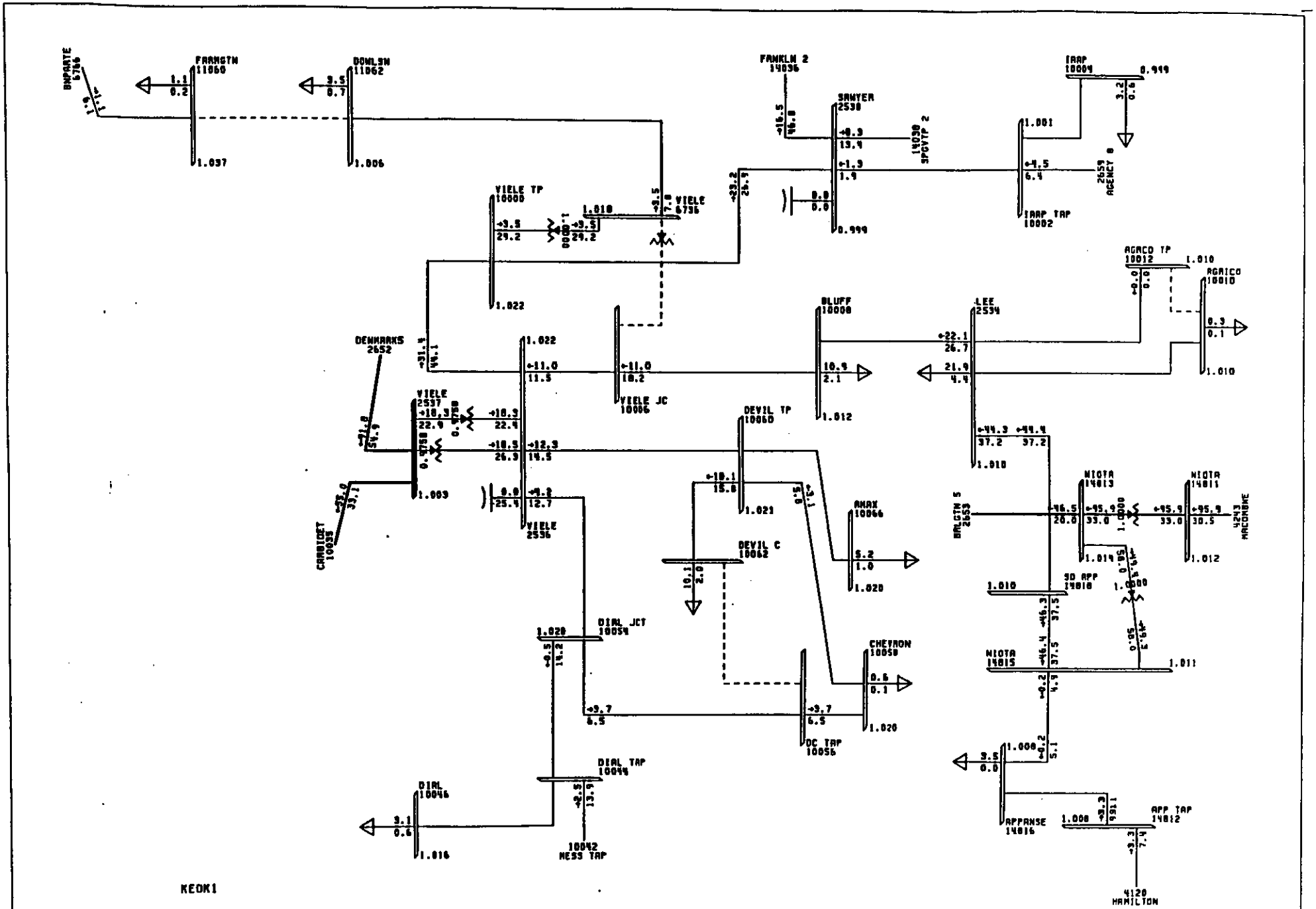

1998B 161KV PLAN, NEW CARB-MESS LINE, 24.3MVAR BGS
CONT 4: LOSS OF CARBIDE T - NEW ROQUETTE
FRI, JUN 02 1995 16:04

100% RATEA
0.925UV 1.060 OV
KV: ≤72 ,≤141 ,≤167

BUS - VOLTAGE (PU)
BRANCH - MW/% OF RATE A
EQUIPMENT - MW/MVAR

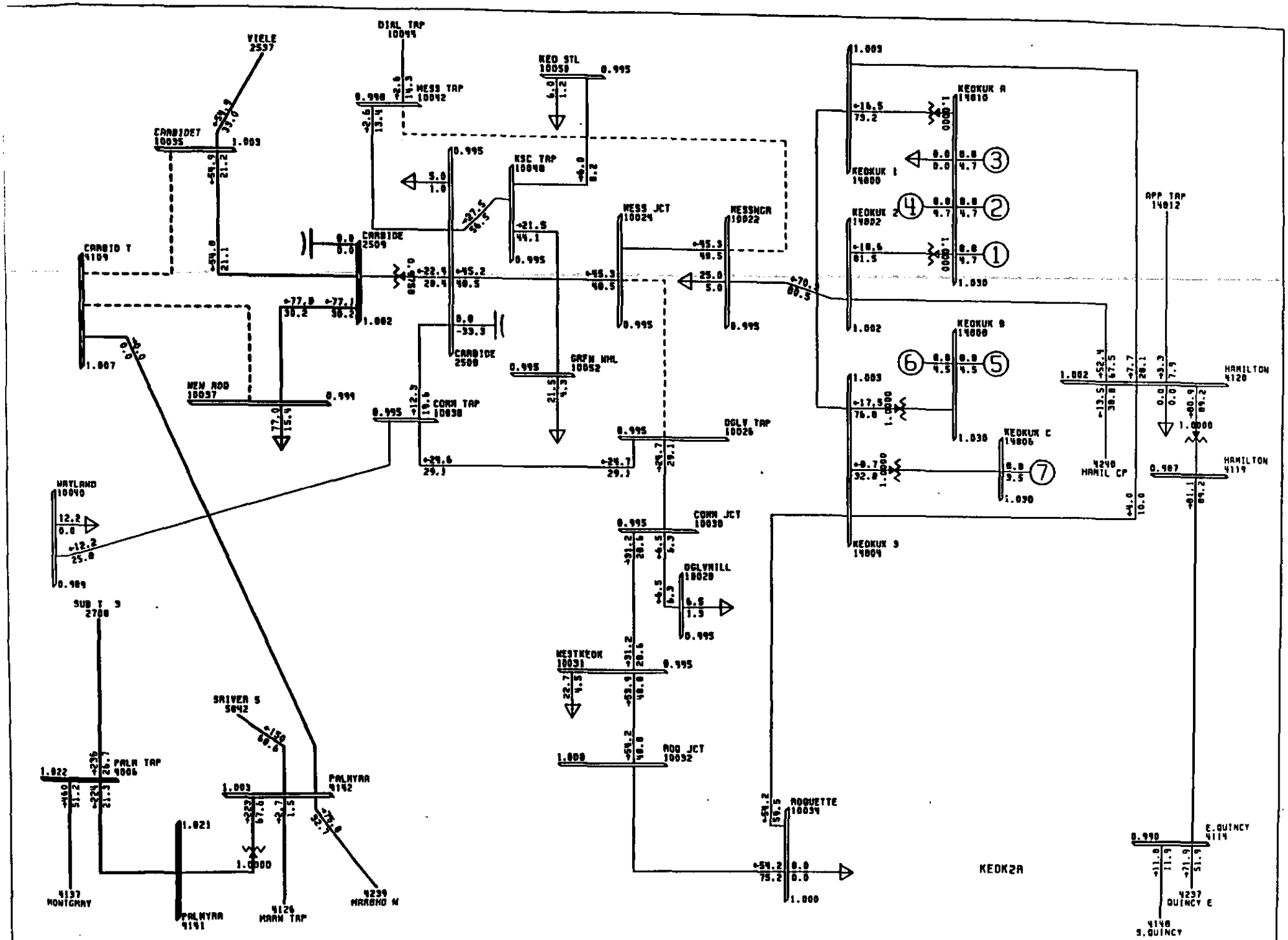

1998B 161KV PLAN, NEW CARB-MESS LINE, 24.3MVAR BGS
CONT 4: LOSS OF CARBIDE T - NEW ROQUETTE

100% RATEA
0.925UV 1.060OV

BUS - VOLTAGE(PU)
BRANCH - MW/% OF RATE A
EQUIPMENT - MW/MVAR

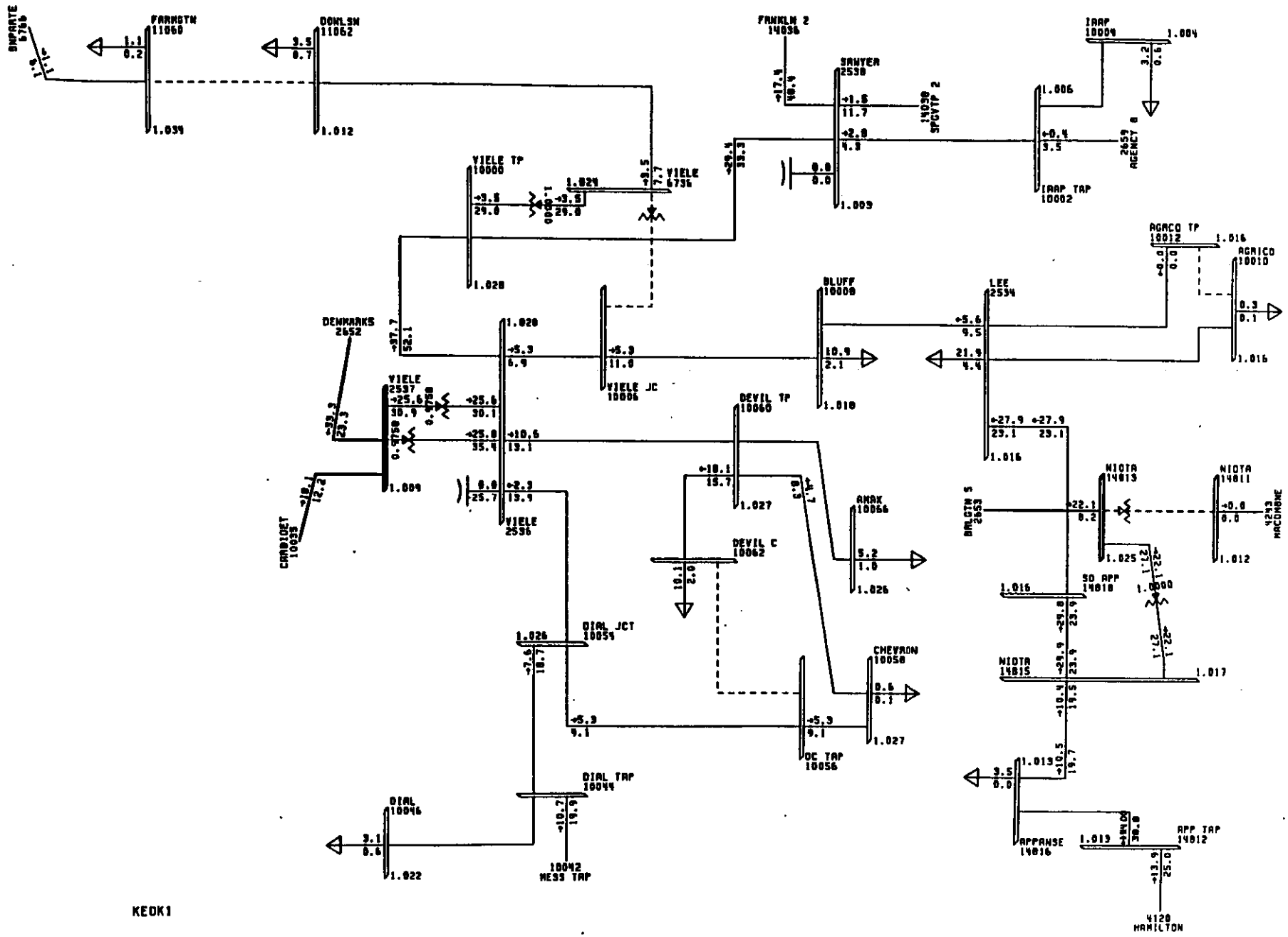

1998B 161KV PLAN, NEW CARB-MESS LINE, 24.3MVAR BGS
CONT 6: LOSS OF NIOTA XFMR
FRI, JUN 02 1995 16:04

100% RATEA
0.925UV 1.060OV
KV: ≤72 ,≤141 ,≤167

BUS - VOLTAGE (PU)
BRANCH - MW/% OF RATE A
EQUIPMENT - MW/MVAR

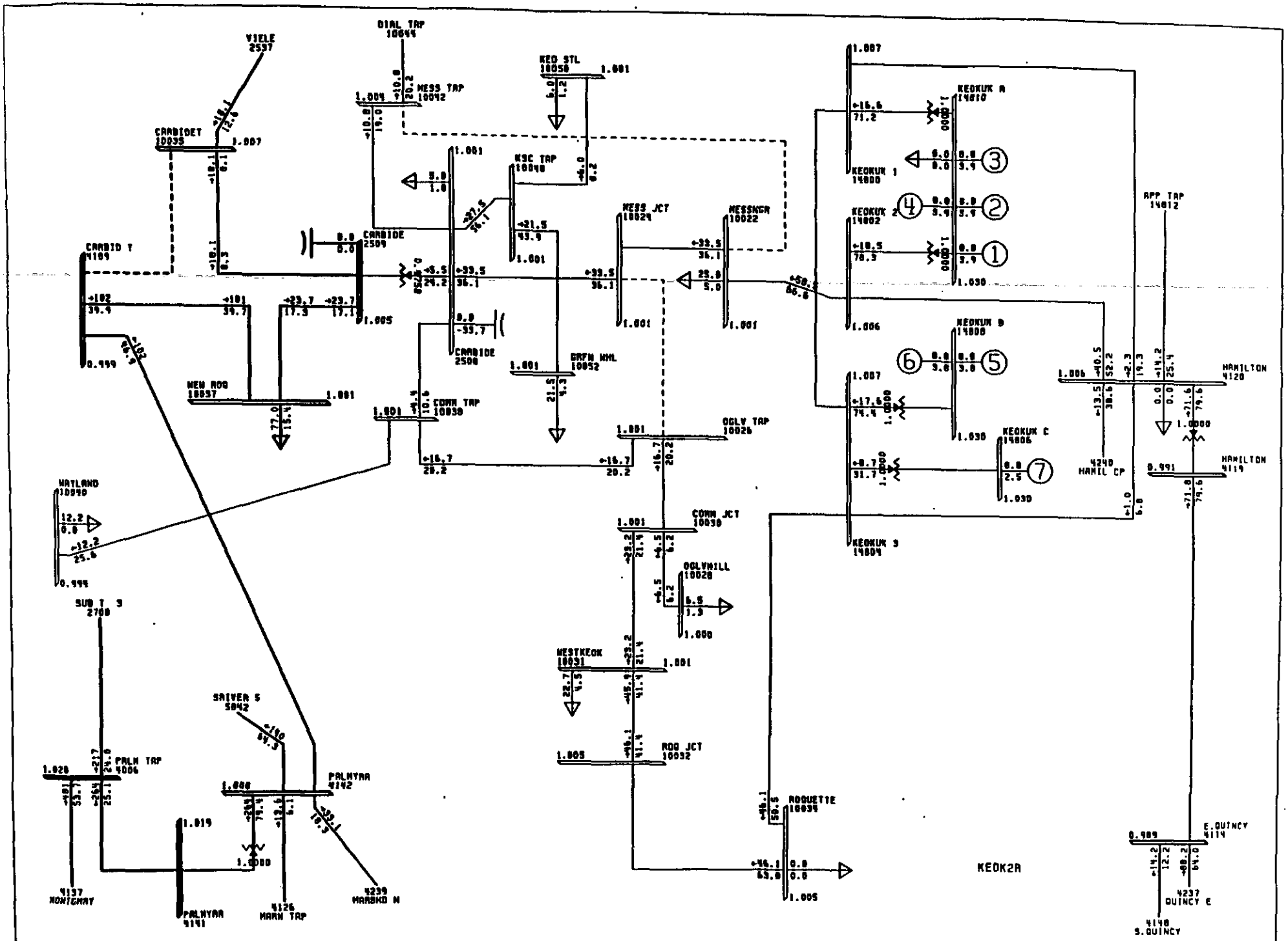

1998B 161KV PLAN, NEW CARB-MESS LINE, 24.3MVAR BGS
CONT 6: LOSS OF NIOTA XFMR

100% RATER
0.925UV 1.060 OV
KV: <72 ≤141 ≤167

BUS - VOLTAGE(PU)
BRANCH - MW/% OF RATE A
EQUIPMENT - MW/MVAR

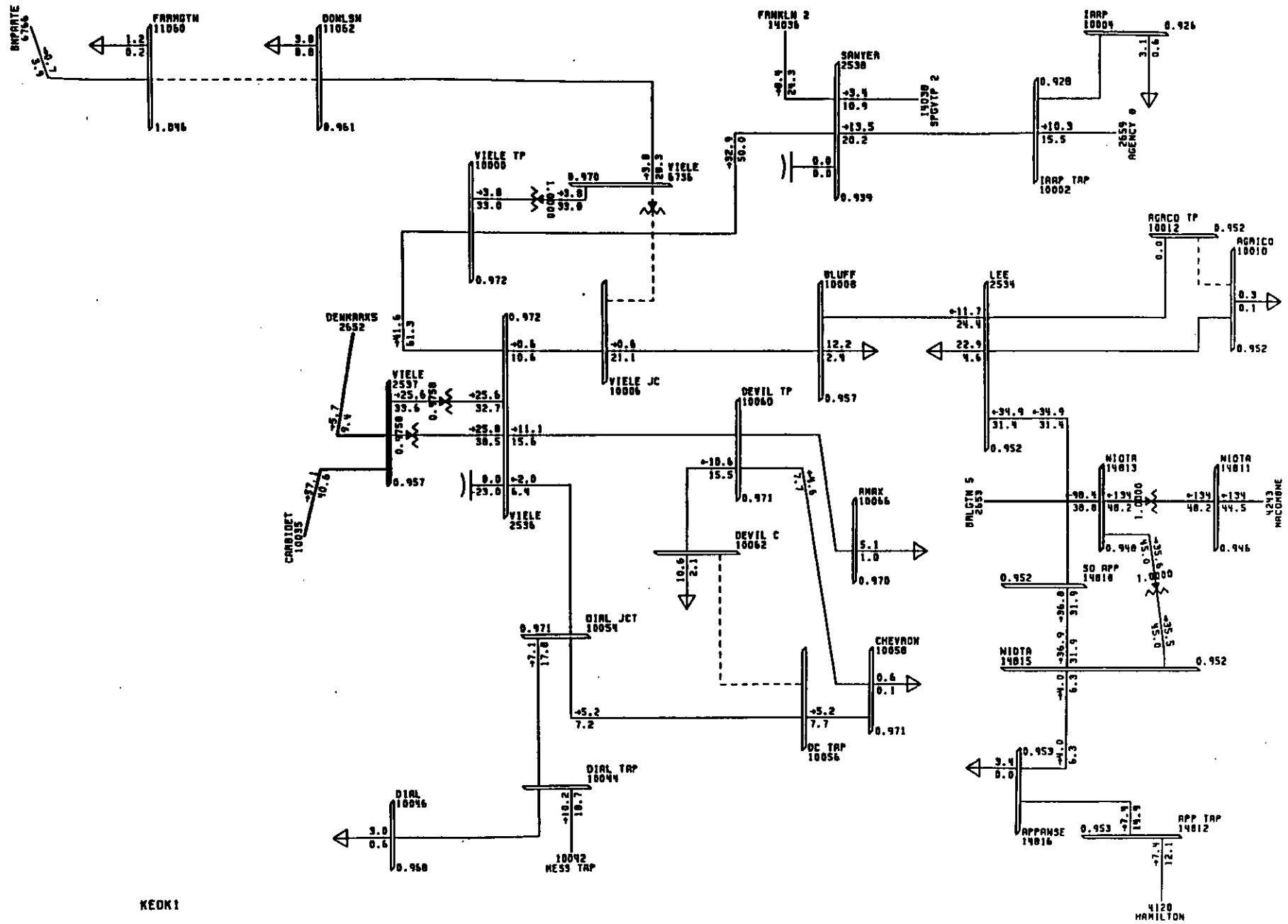

2006B 69KV PLAN, NEW CARB-MESS LINE, ALL CAPS
CONT 7: BGS OUTAGE
MON, JUN 05 1995 07:54

100% RATEA
0.925UV 1.060OV
KV:≤72 .≤141 .≤167

BUS - VOLTAGE(PU)
BRANCH - MW/% OF RATE A
EQUIPMENT - MW/MVAR

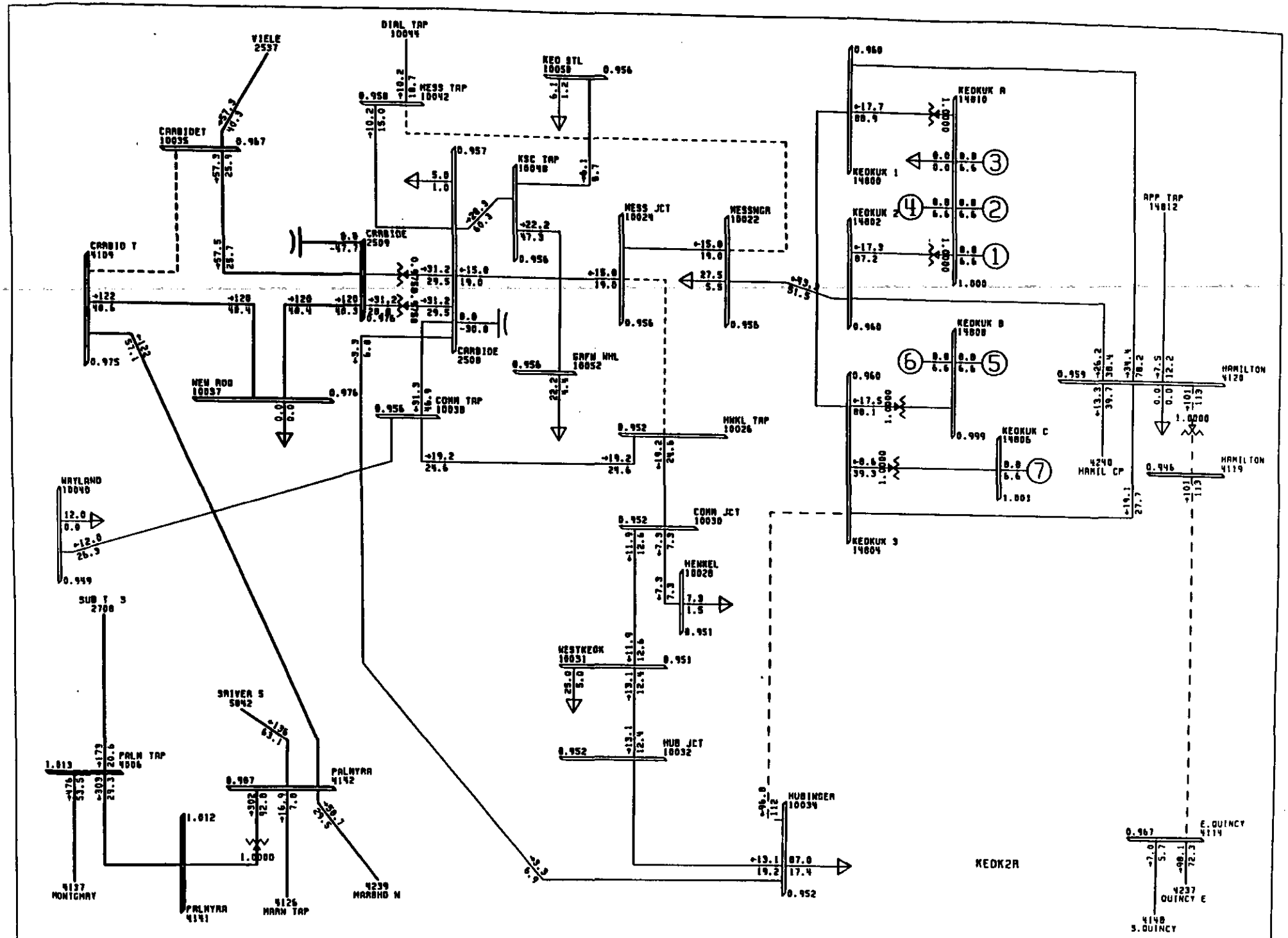

2006B 69KV PLAN, NEW CARB-MESS LINE, ALL CAPS
CONT 7: BGS OUTAGE

100% RATEA
0.925UV 1.060OV

BUS - VOLTAGE(PU)
BRANCH - MW/% OF RATE A
EQUIPMENT - MW/MVAR

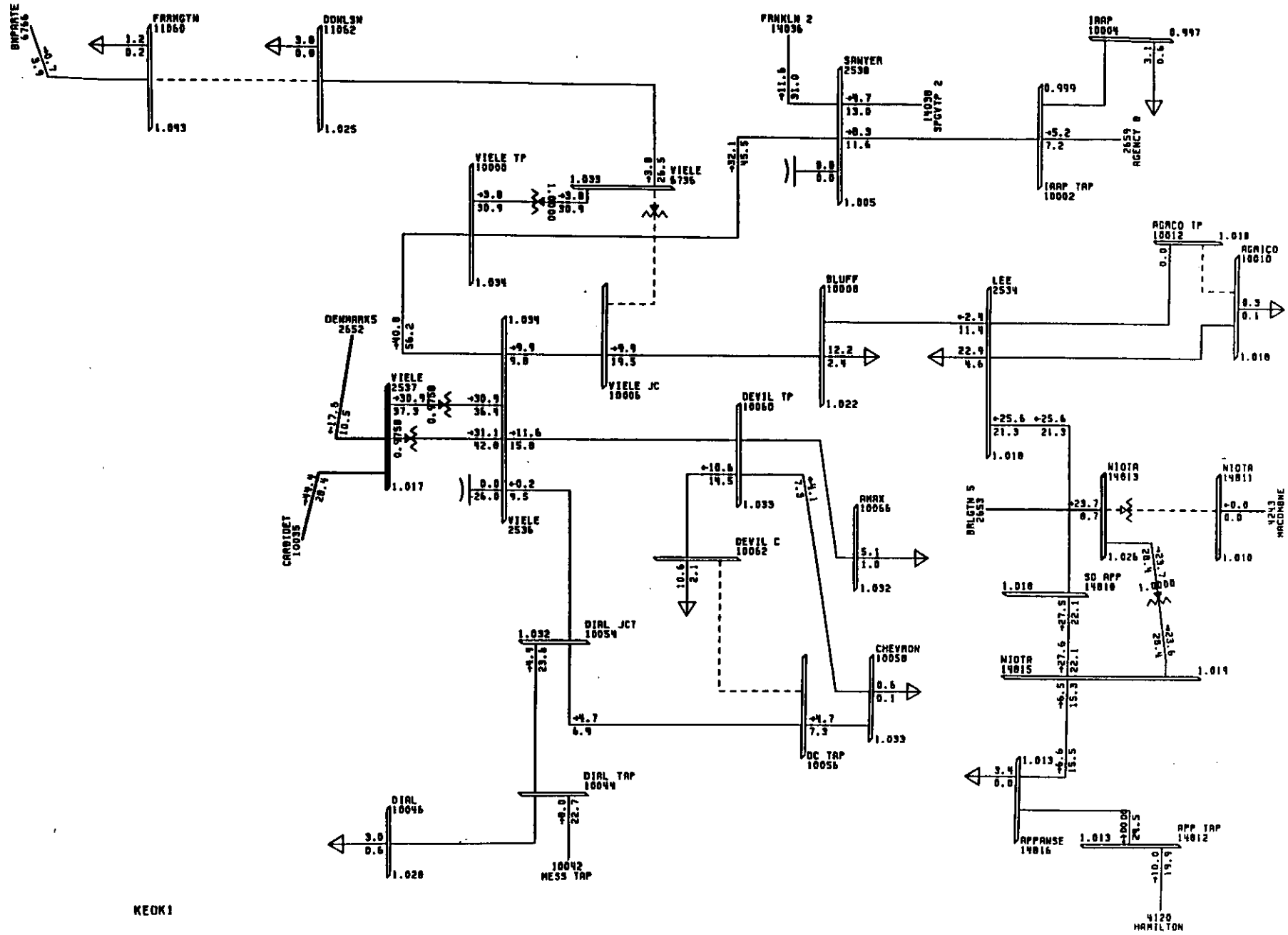

2006B 69KV PLAN, NEW CARB-MESS LINE, ALL CAPS
CONT 6: LOSS OF NIOTA XFMR
MON, JUN 05 1995 07:54

100% RATEA
0.925UV 1.060 OV
KV: ≤72 , ≤141 , ≤167

BUS - VOLTAGE (PU)
BRANCH - MW/% OF RATE A
EQUIPMENT - MW/MVAR

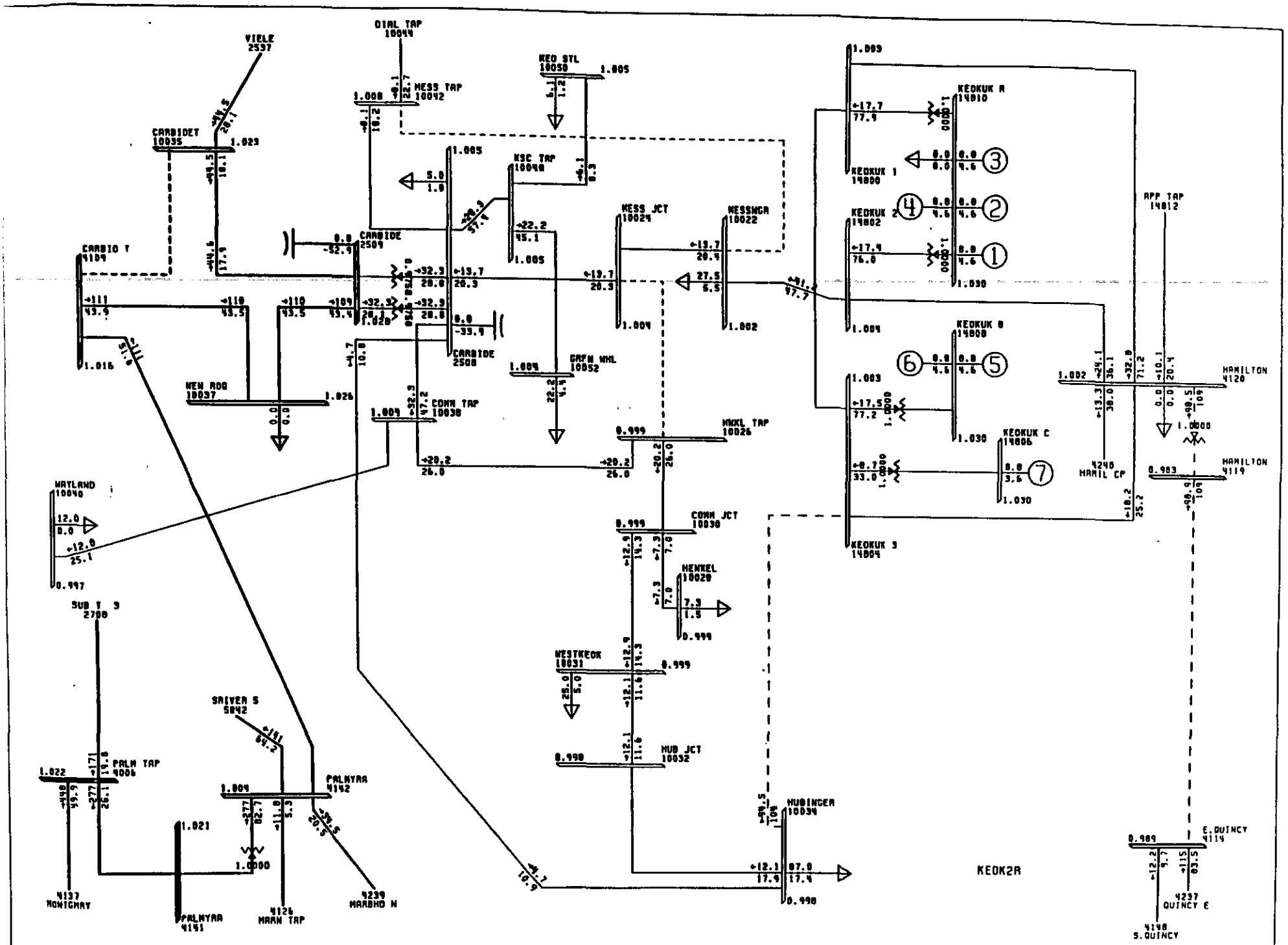

2006B 69KV PLAN, NEW CARB-MESS LINE, ALL CAPS
CONT 6: LOSS OF NIOTA XFMR

100% RATEA
0.925UV 1.060OV

BUS - VOLTAGE(PU)
BRANCH - MW/% OF RATE A
EQUIPMENT - MW/MVAR

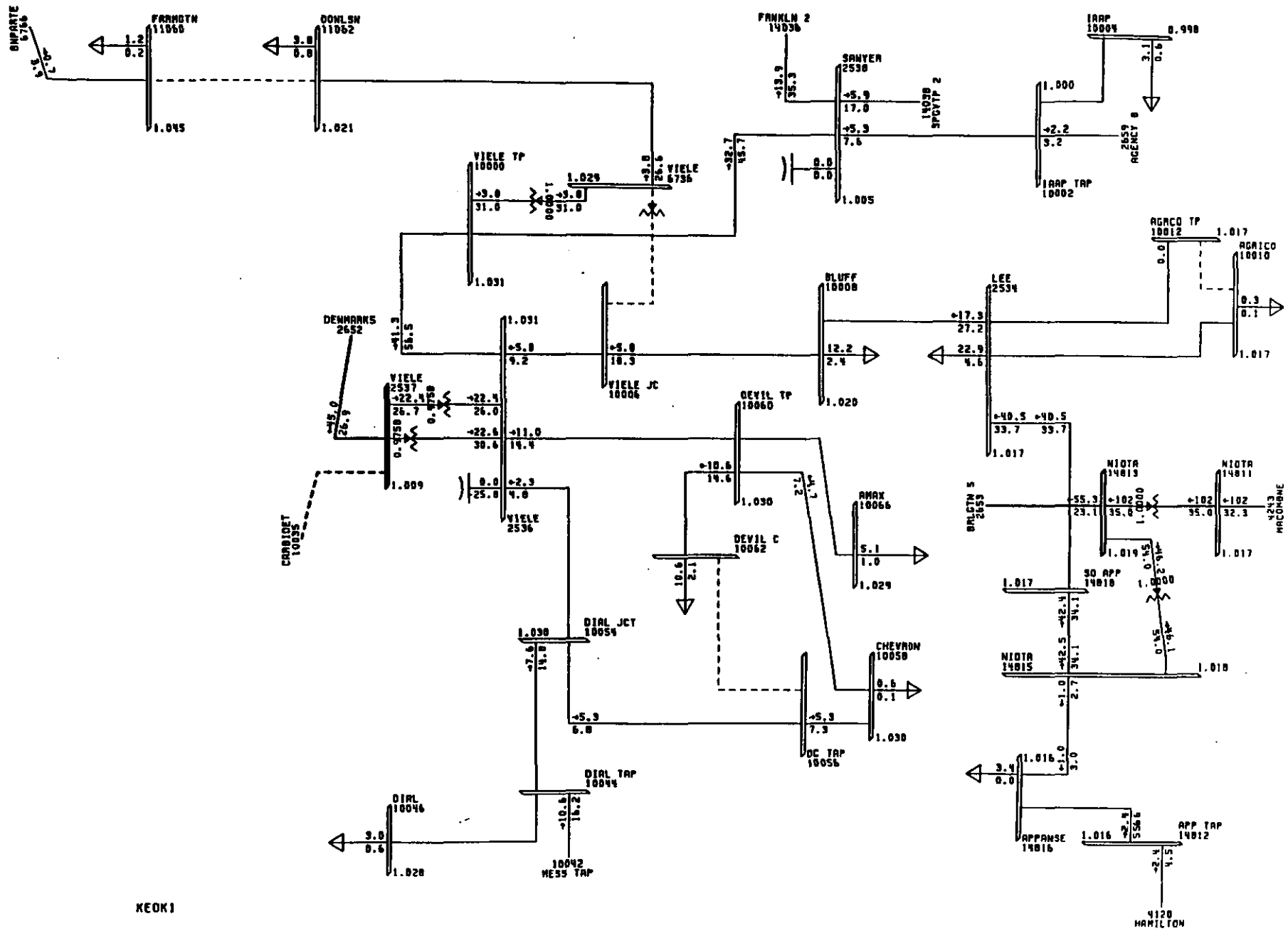

2006B 69KV PLAN, NEW CARB-MESS LINE, ALL CAPS
CONT 5: LOSS OF CARBIDE - VIELE
MON. JUN 05 1995 07:53

100% RATEA
0.925UV 1.060OV
KV: ≤72 ,≤141 ,≤167

BUS - VOLTAGE (PU)
BRANCH - MW/% OF RATE A
EQUIPMENT - MW/MVAR

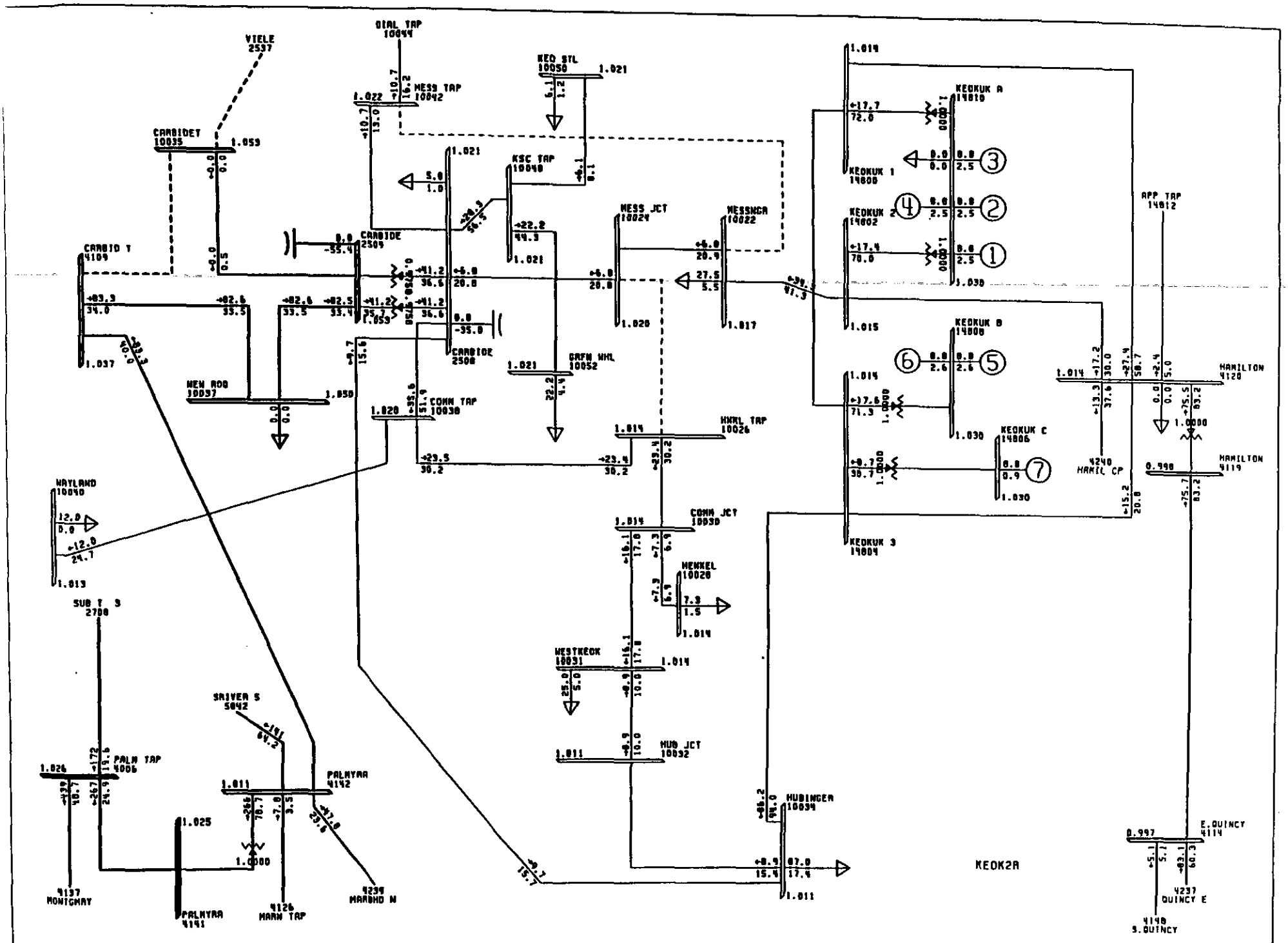

2006B 69KV PLAN, NEW CARB-MESS LINE, ALL CAPS
CONT 5: LOSS OF CARBIDE - VIELE

100% RATER
0.925UV 1.060OV

BUS - VOLTAGE (PU)
BRANCH - MW/% OF RATE A
EQUIPMENT - MW/MVAR

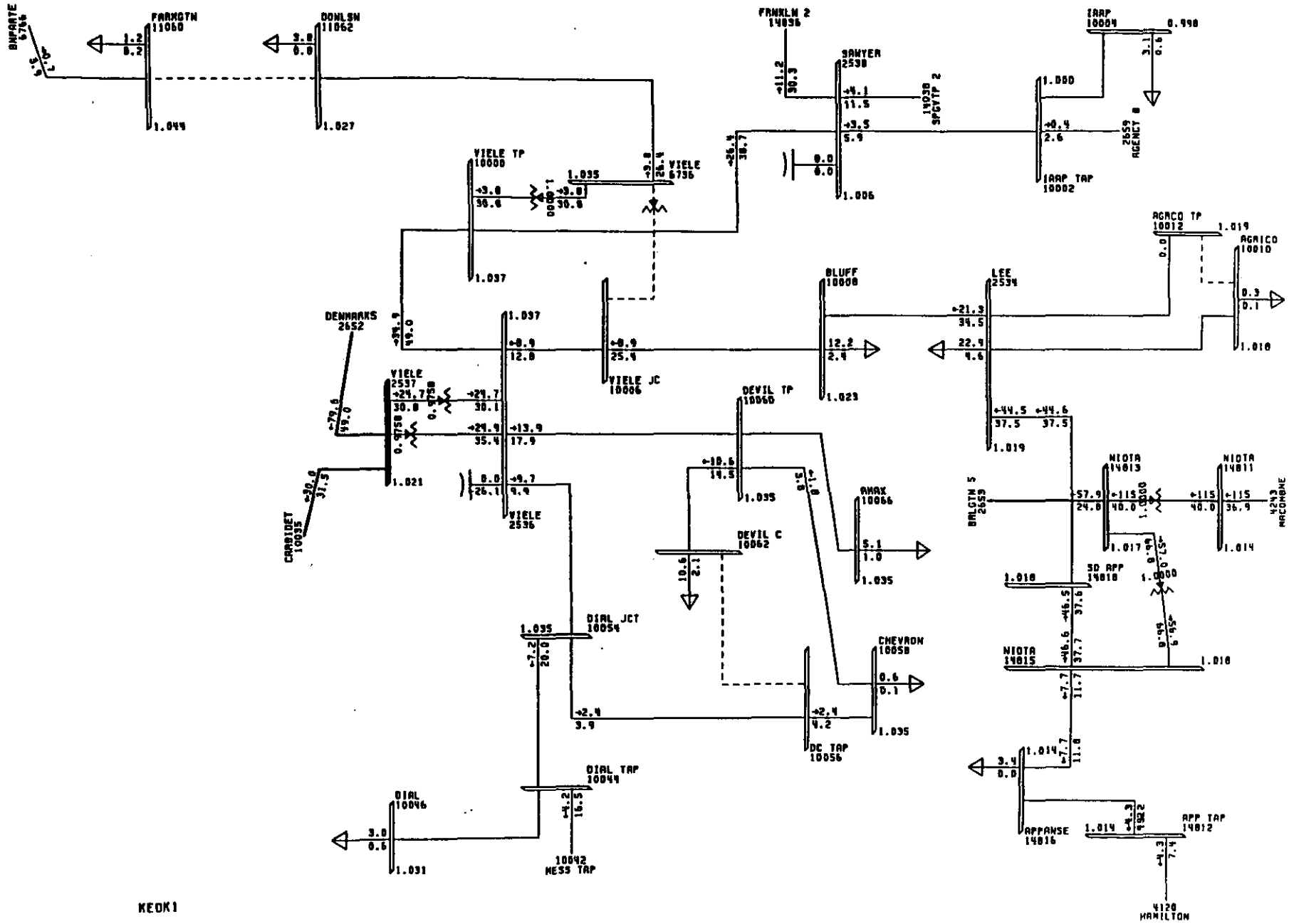

2006B 69KV PLAN, NEW CARB-MESS LINE, ALL CAPS
CONT 4: LOSS OF CARBIDE T - NEW ROQUETTE
MON, JUN 05 1995 07:53

100% RATEA
0.925UV 1.060OV
KV: ≤72 ,≤141 ,≤167

BUS - VOLTAGE (PU)
BRANCH - MW/% OF RATE A
EQUIPMENT - MW/MVAR

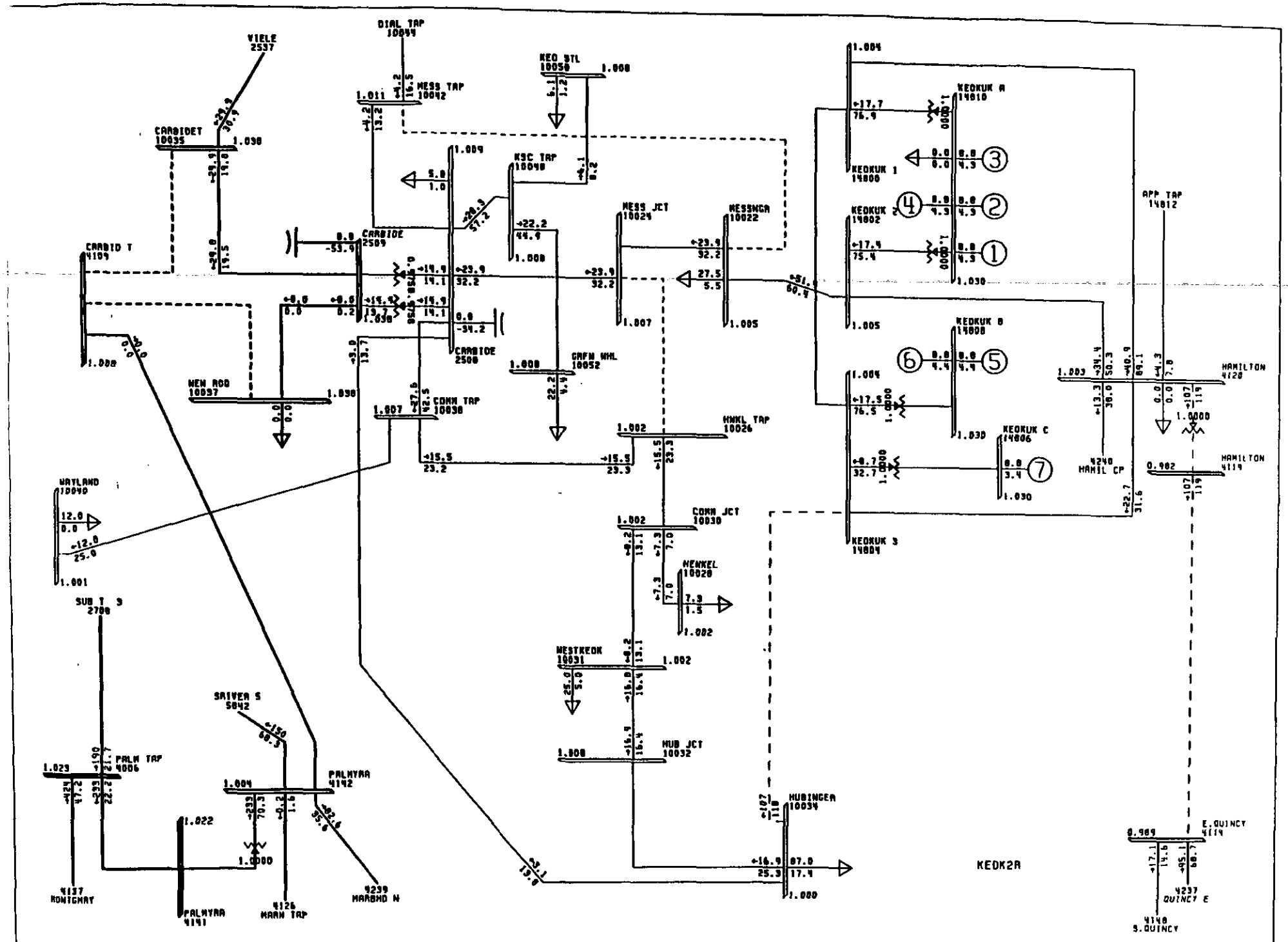

2006B 69KV PLAN, NEW CARB-MESS LINE, ALL CAPS
CONT 4: LOSS OF CARBIDE T - NEW ROQUETTE

100% RATEA
0.925UV 1.060OV

BUS - VOLTAGE (PU)
BRANCH - MW/% OF RATE A
EQUIPMENT - MW/MVAR

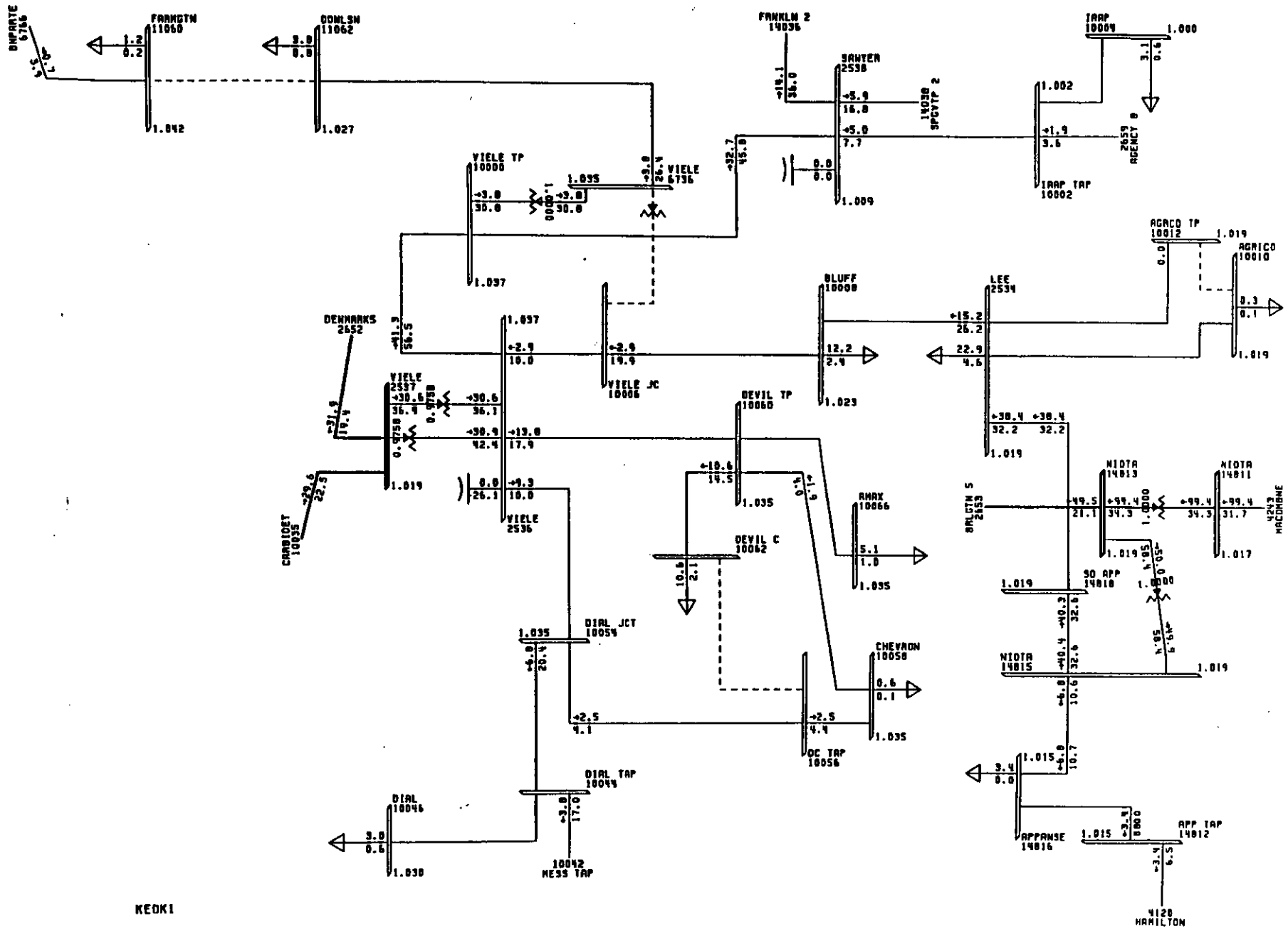

2006B 69KV PLAN, NEW CARB-MESS LINE, ALL CAPS
CONT 3: LOSS OF CARBIDE XFMR
MON, JUN 05 1995 07:53

100% RATER
0.925UV 1.060OV
KV: ≤72 ,≤141 ,≤167

BUS - VOLTAGE (PU)
BRANCH - MW/% OF RATE A
EQUIPMENT - MW/MVAR

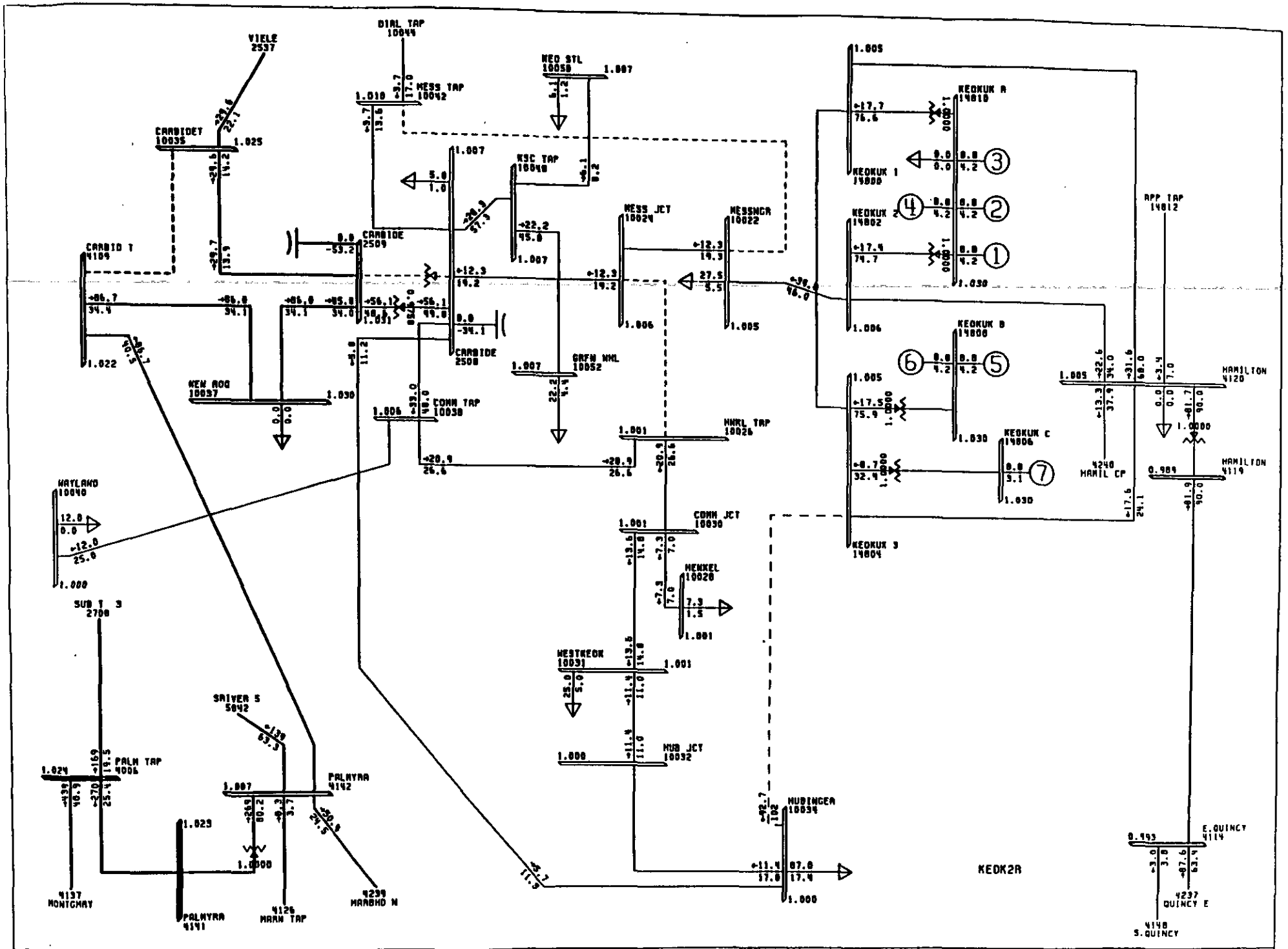

2006B 69KV PLAN, NEW CARB-MESS LINE, ALL CAPS
CONT 3: LOSS OF CARBIDE XFMR

100% RATEA
0.925UV 1.060OV

BUS - VOLTAGE(PU)
BRANCH - MW/% OF RATE A

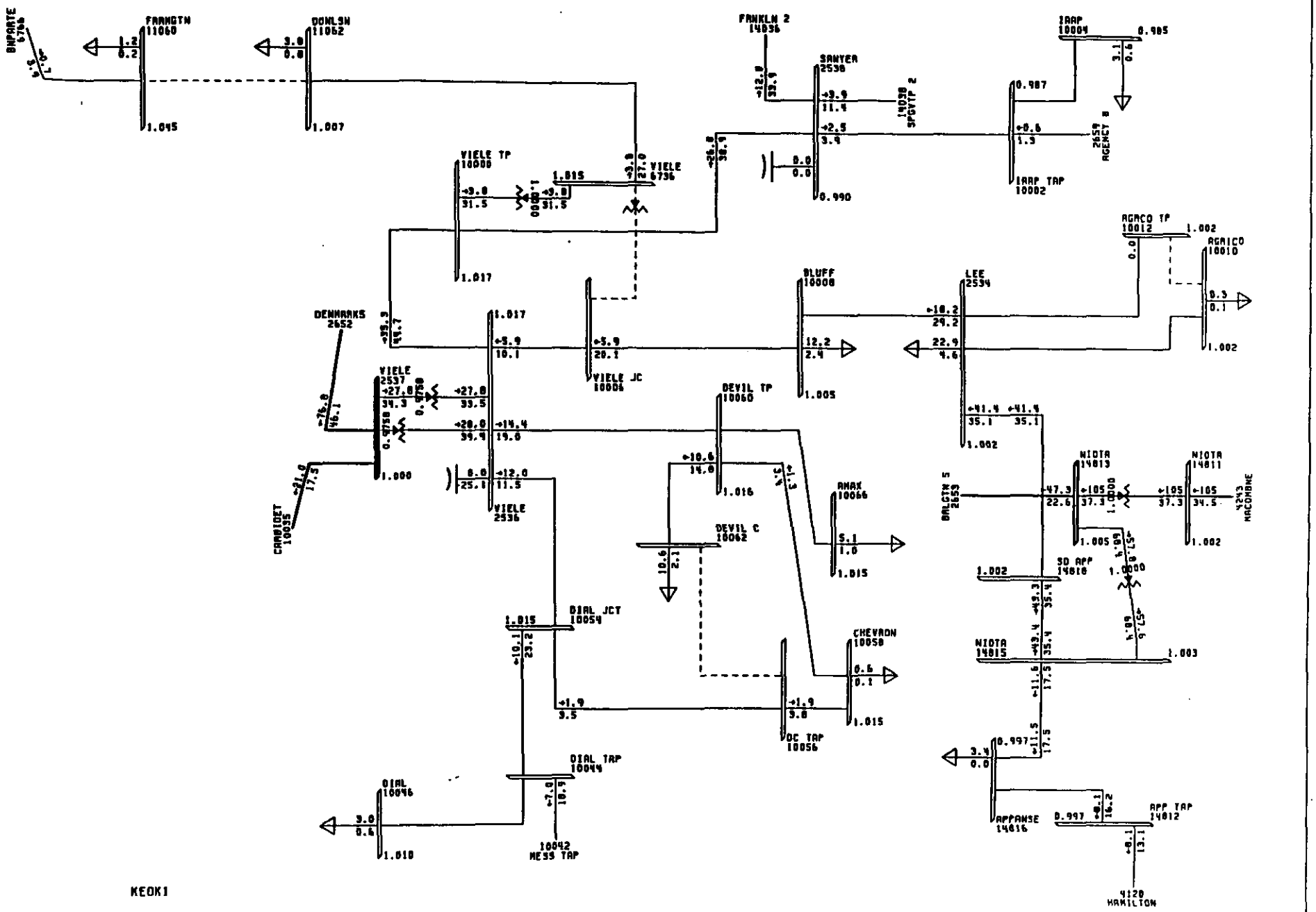

2006B 69KV PLAN, NEW CARB-MESS LINE, ALL CAPS
CONT 2: LOSS OF PALMYRA 345/161
MON, JUN 05 1995 07:53

100% RATEA
0.925UV 1.060OV
KV: ≤72 ,≤141 ,≤167

BUS - VOLTAGE (PU)
BRANCH - MW/% OF RATE A
EQUIPMENT - MW/MVAR

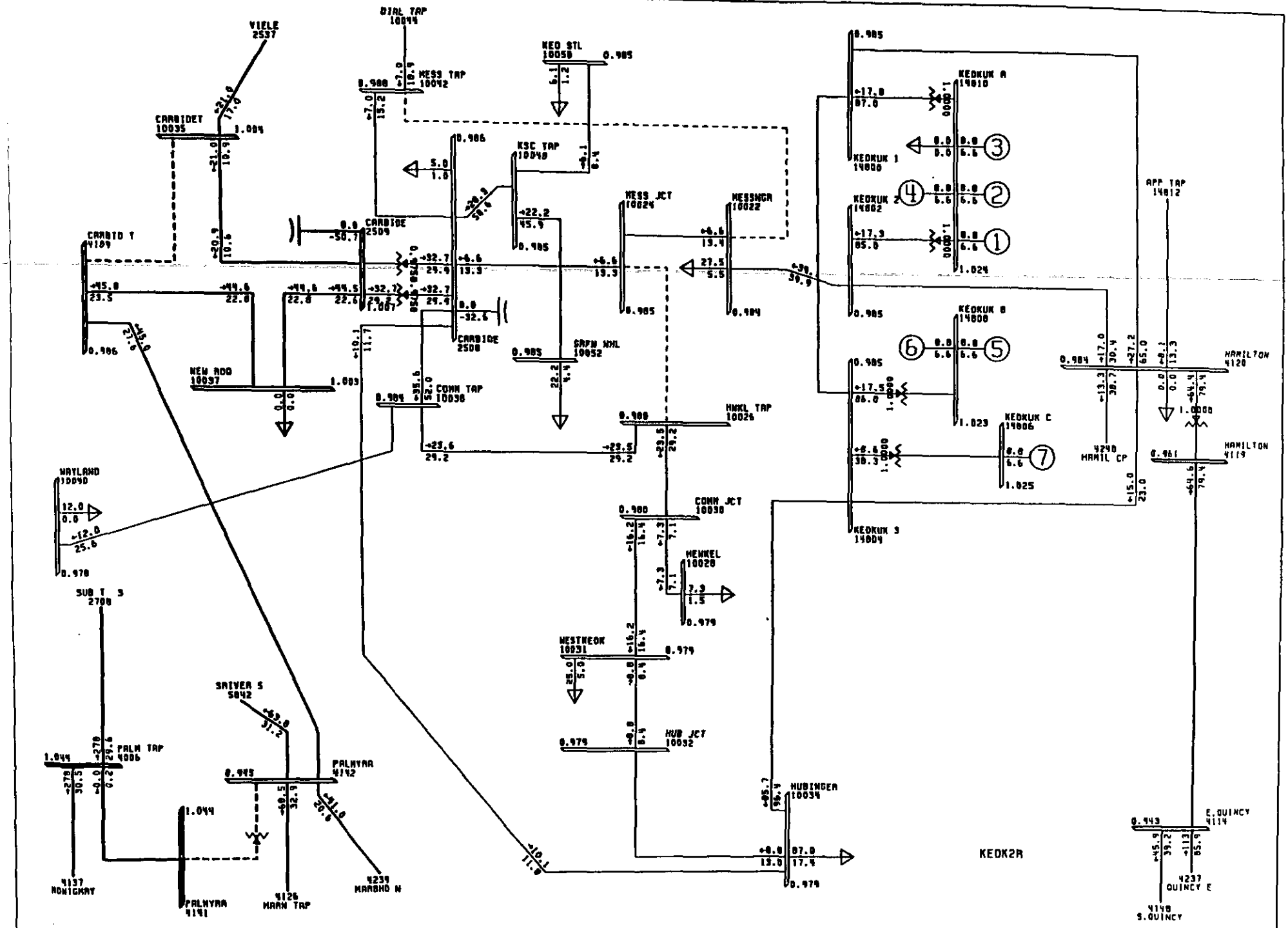

2006B 69KV PLAN, NEW CARB-MESS LINE, ALL CAPS
CONT 2: LOSS OF PALMYRA 345/161

100% RATEA
0.925UV 1.060OV

BUS - VOLTAGE (PU)
BRANCH - MW/% OF RATE A
EQUIPMENT - MW/MVAR

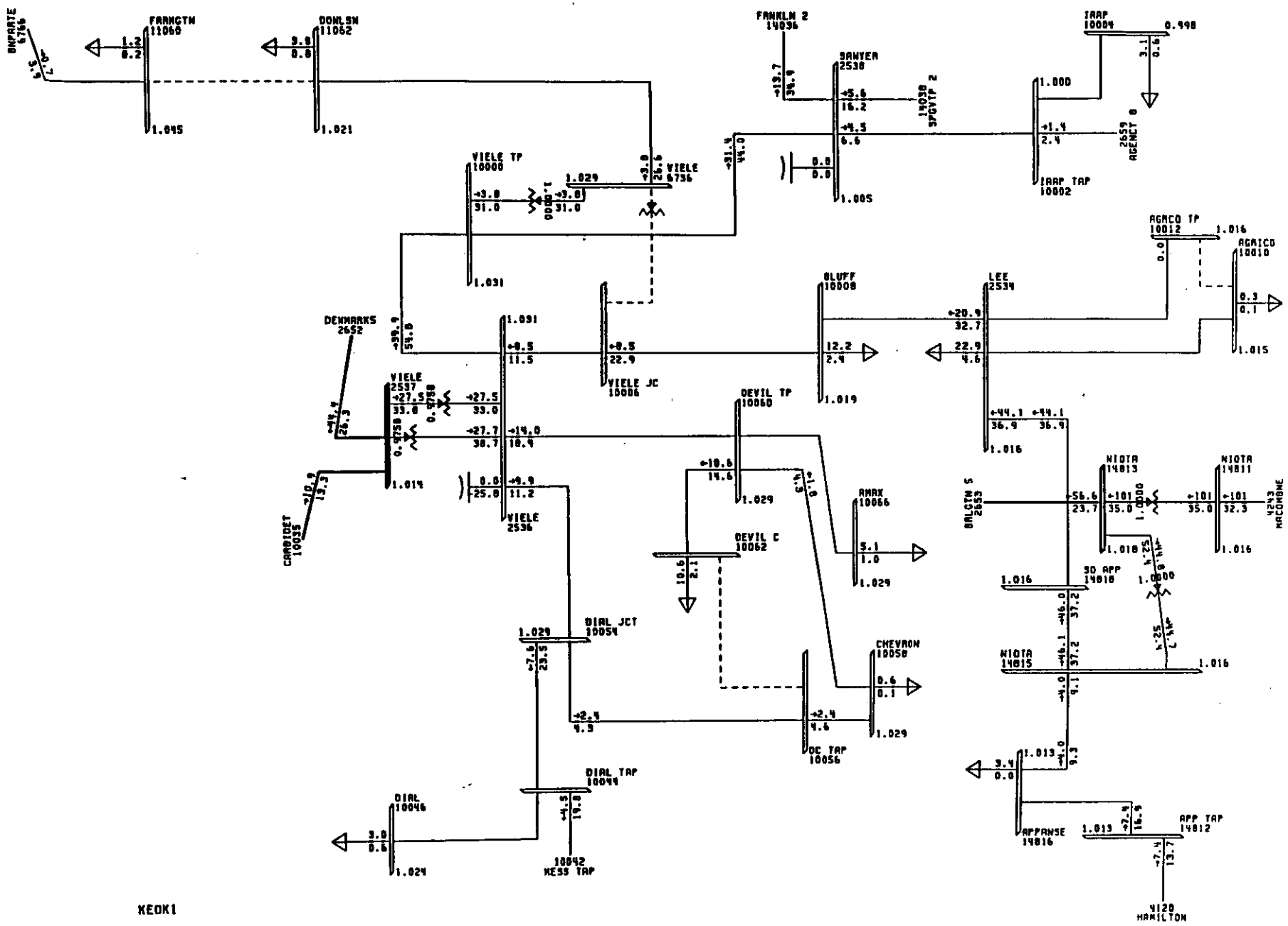

POWER TECHNOLOGIES	2006B 69KV PLAN, NEW CARB-MESS LINE, ALL CAPS CONT 1: LOSS OF NEW HYDRO-ROQUETTE LINE MON. JUN 05 1995 07:53	100% RATEA 0.925UV 1.060 OV KV: ≤72 , ≤141 , ≤167	BUS - VOLTAGE(PU) BRANCH - MW/% OF RATE A EQUIPMENT - MW/MVAR

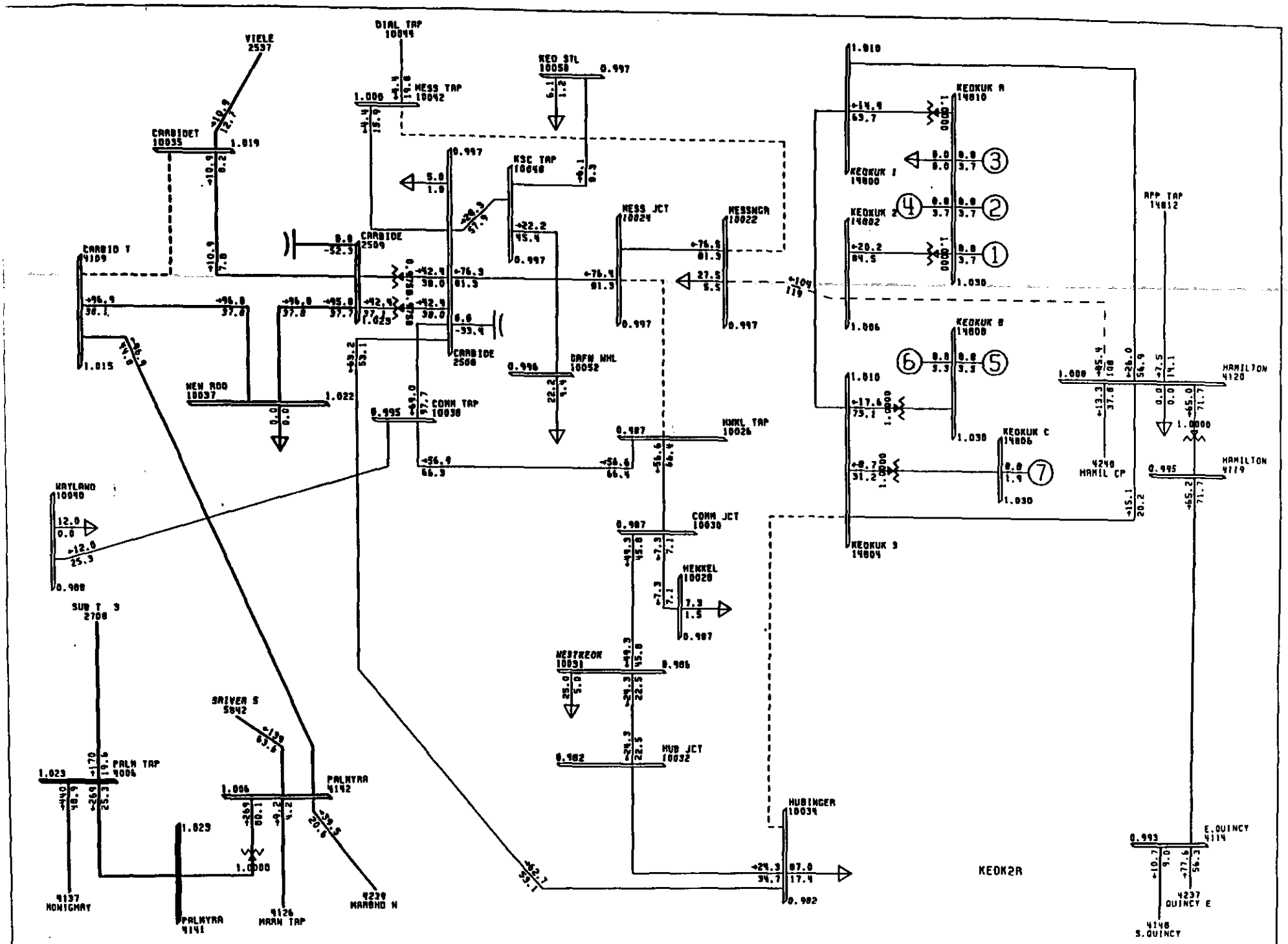

2006B 69KV PLAN, NEW CARB-MESS LINE, ALL CAPS
CONT 1: LOSS OF NEW HYDRO-ROQUETTE LINE

100% RATER
0.925UV 1.060 OV

BUS - VOLTAGE (PU)
BRANCH - MW/% OF RATE A
EQUIPMENT - MW/MVAR

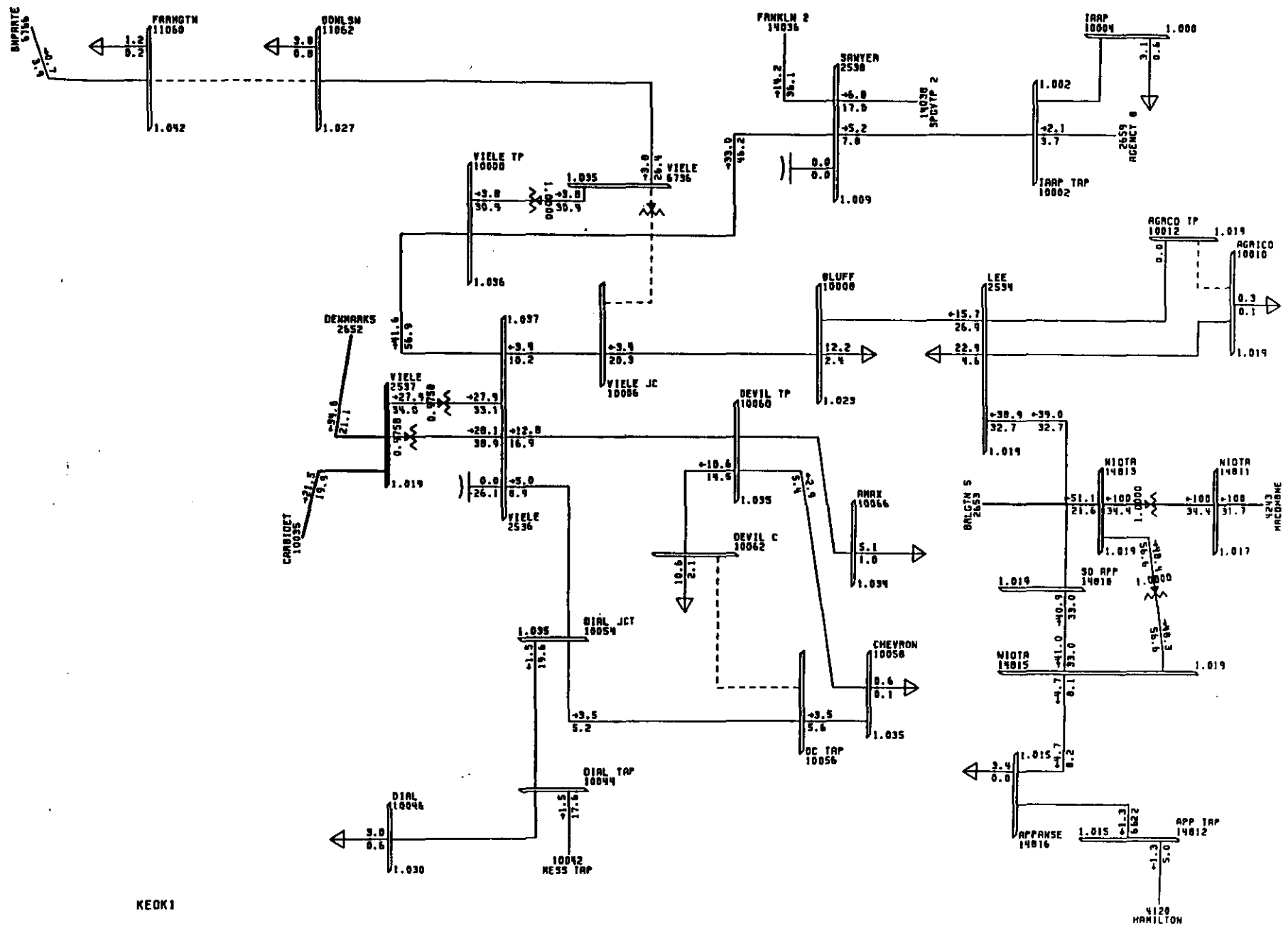

2006B 69KV PLAN, NEW CARB-MESS LINE, ALL CAPS
BASE CASE
MON. JUN 05 1995 07:52

100% RATEA
0.925UV 1.060 OV
KV: ≤72 , ≤141 , ≤167

BUS - VOLTAGE (PU)
BRANCH - MW/% OF RATE A
EQUIPMENT - MW/MVAR

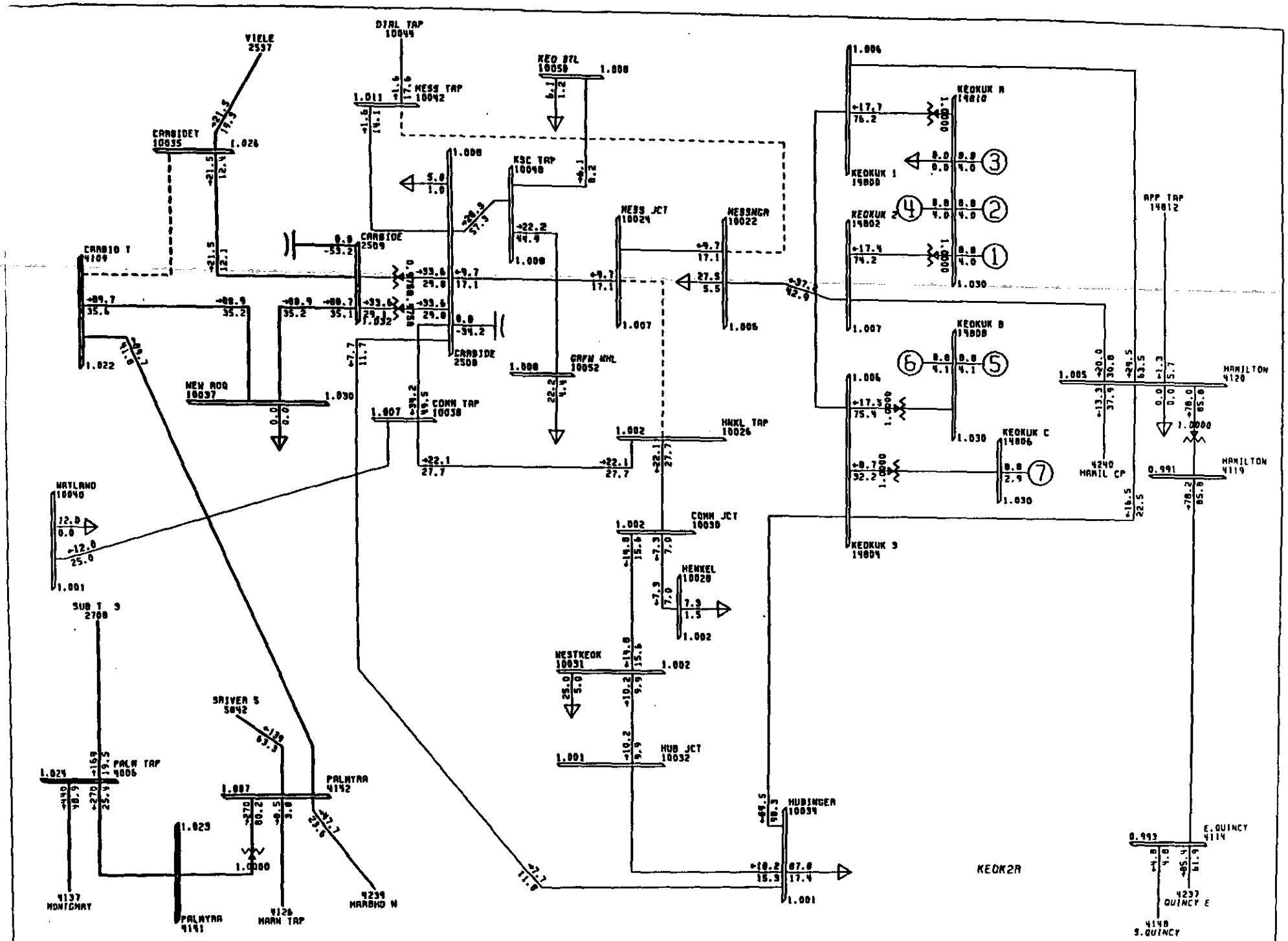

2006B.69KV PLAN, NEW CARB-MESS LINE, ALL CAPS
BASE CASE

100% RATEA
0.925UV 1.060OV

BUS - VOLTAGE(PU)
BRANCH - MW/% OF RATE A
EQUIPMENT - MW/MVAR

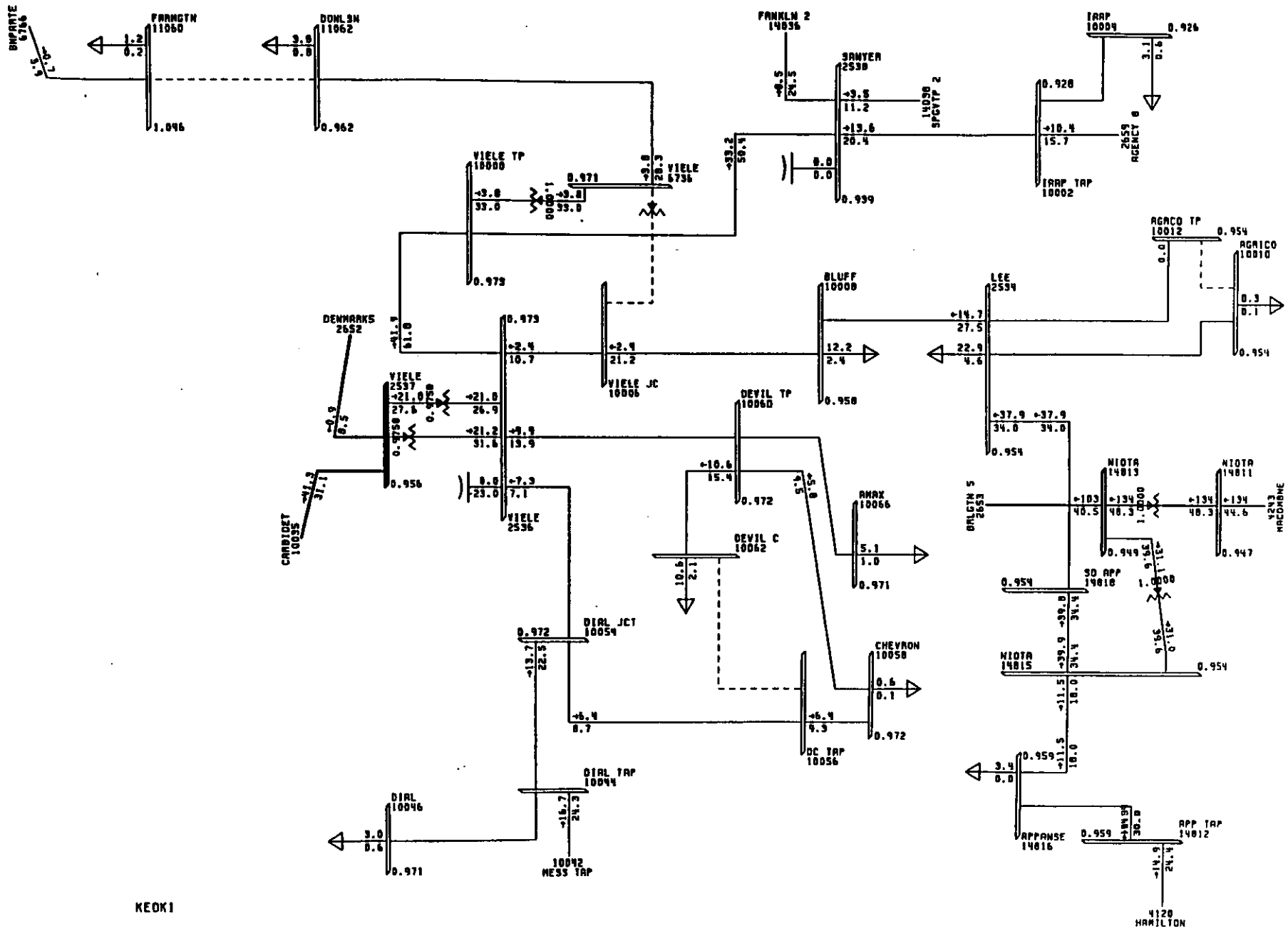

2006B 161KV PLAN, NEW CARB-MESS LINE, ALL CAPS
CONT 7: BGS OUTAGE
MON. JUN 05 1995 08:02

100% RATEA
0.925UV 1.060OV
KV: ≤72 ,≤141 ,≤167

BUS - VOLTAGE (PU)
BRANCH - MW/% OF RATE A
EQUIPMENT - MW/MVAR

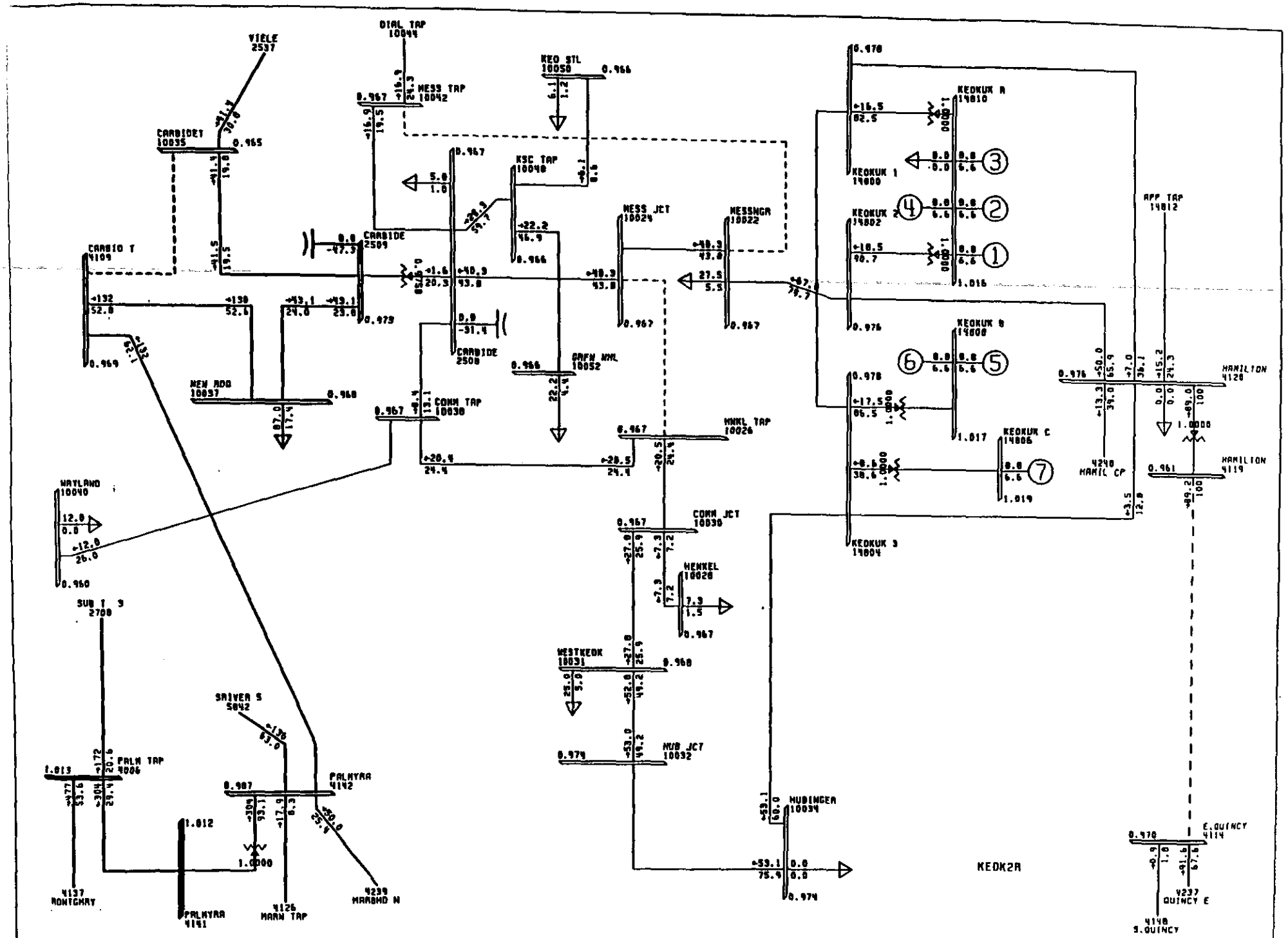

2006B .161KV PLAN, NEW CARB-MESS LINE, ALL CAPS
CONT 7: BGS OUTAGE

100% RATEA
0.925UV 1.060OV

BUS - VOLTAGE (PU)
BRANCH - MW/% OF RATE A
EQUIPMENT - MW/MVAR

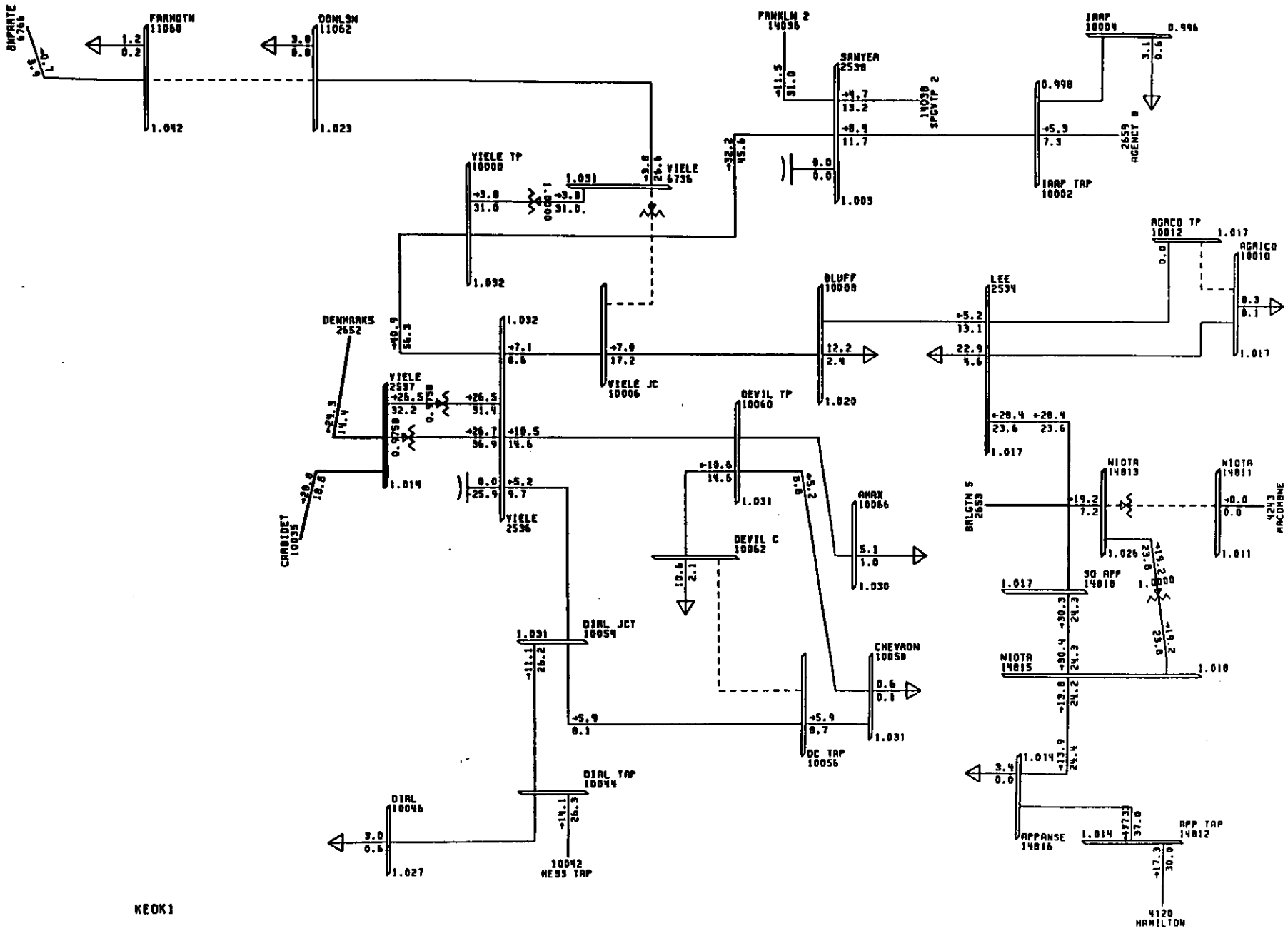

2006B 161KV PLAN, NEW CARB-MESS LINE, ALL CAPS
CONT 6: LOSS OF NIOTA XFMR
MON, JUN 05 1995 08:04

100% RATEA
0.925 UV 1.060 OV
KV: ≤72 ,≤141 ,≤167

BUS - VOLTAGE (PU)
BRANCH - MW/% OF RATE A
EQUIPMENT - MW/MVAR

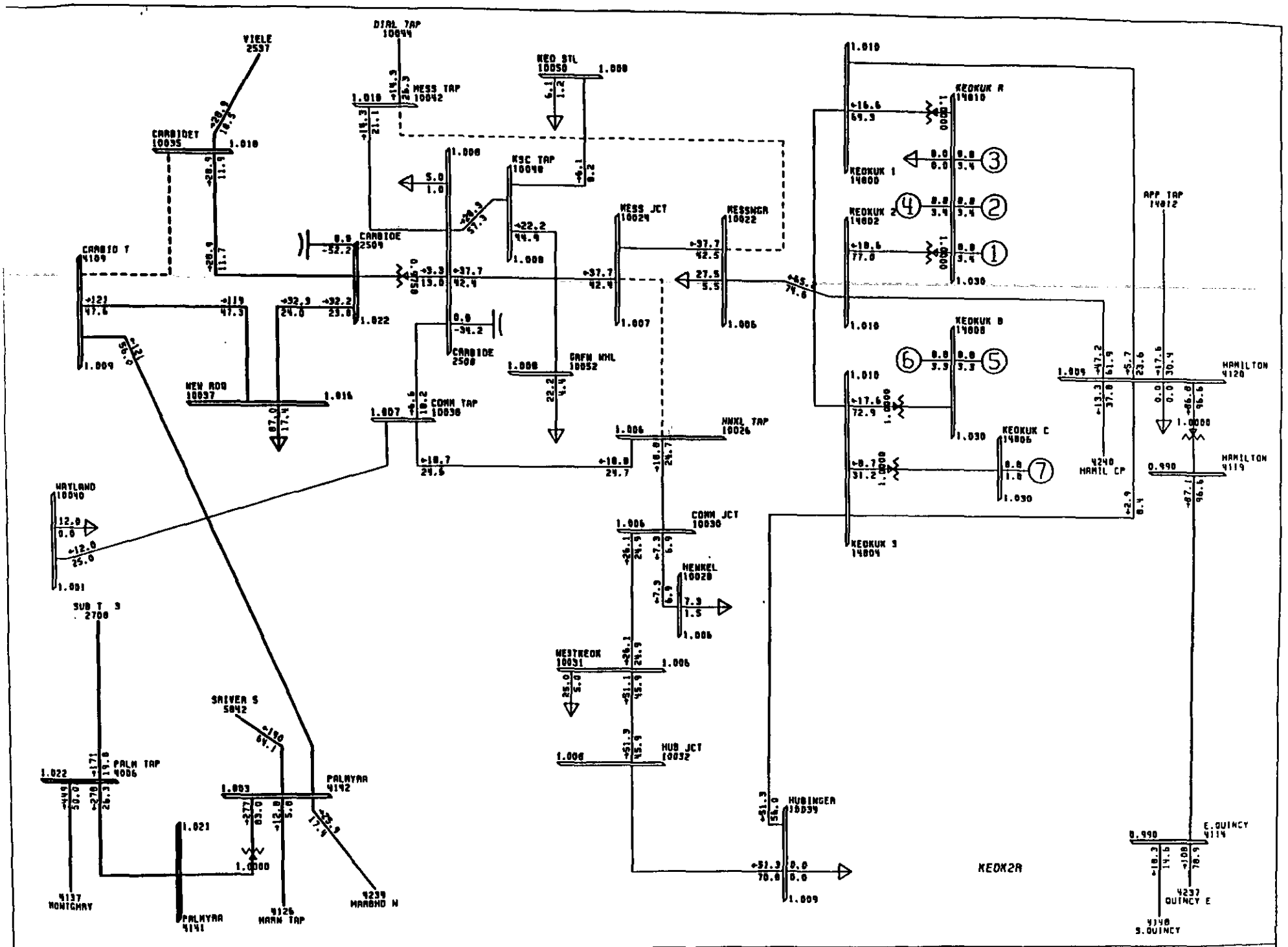

2006B 161KV PLAN, NEW CARB-MESS LINE, ALL CAPS
CONT 6: LOSS OF NIOTA XFMR

100% RATEA
0.925UV 1.060OV
KV: <72 <141 <167

BUS - VOLTAGE (PU)
BRANCH - MW/% OF RATE A
EQUIPMENT - MW/MVAR

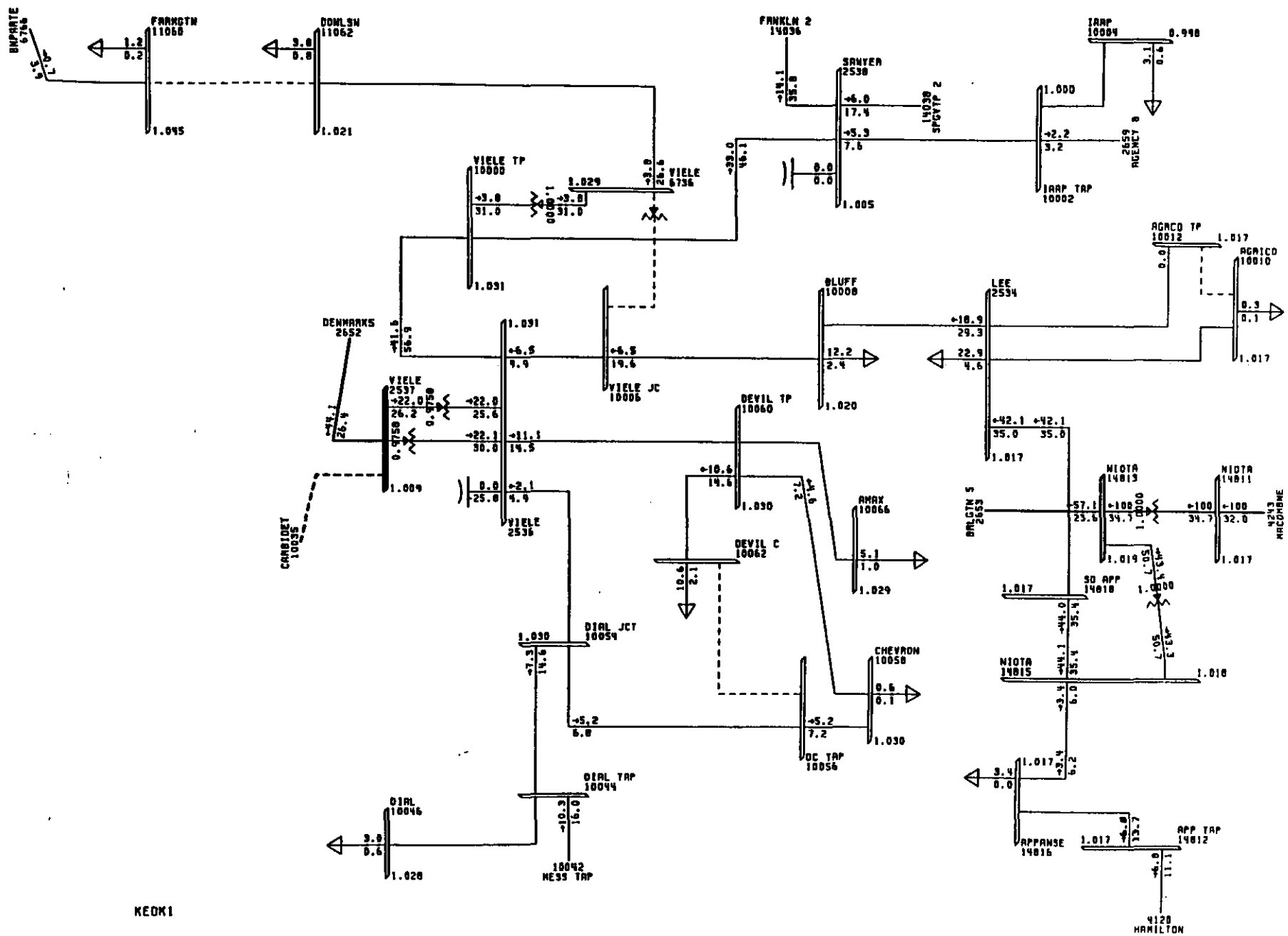

2006B 161KV PLAN, NEW CARB-MESS LINE, ALL CAPS
CONT 5: LOSS OF CARBIDE - VIELE
MON, JUN 05 1995 07:47

100% RATEA
0.925UV 1.060 OV
KV: ≤72 ,≤141 ,≤167

BUS - VOLTAGE (PU)
BRANCH - MW/% OF RATE A
EQUIPMENT - MW/MVAR

POWER TECHNOLOGIES INC

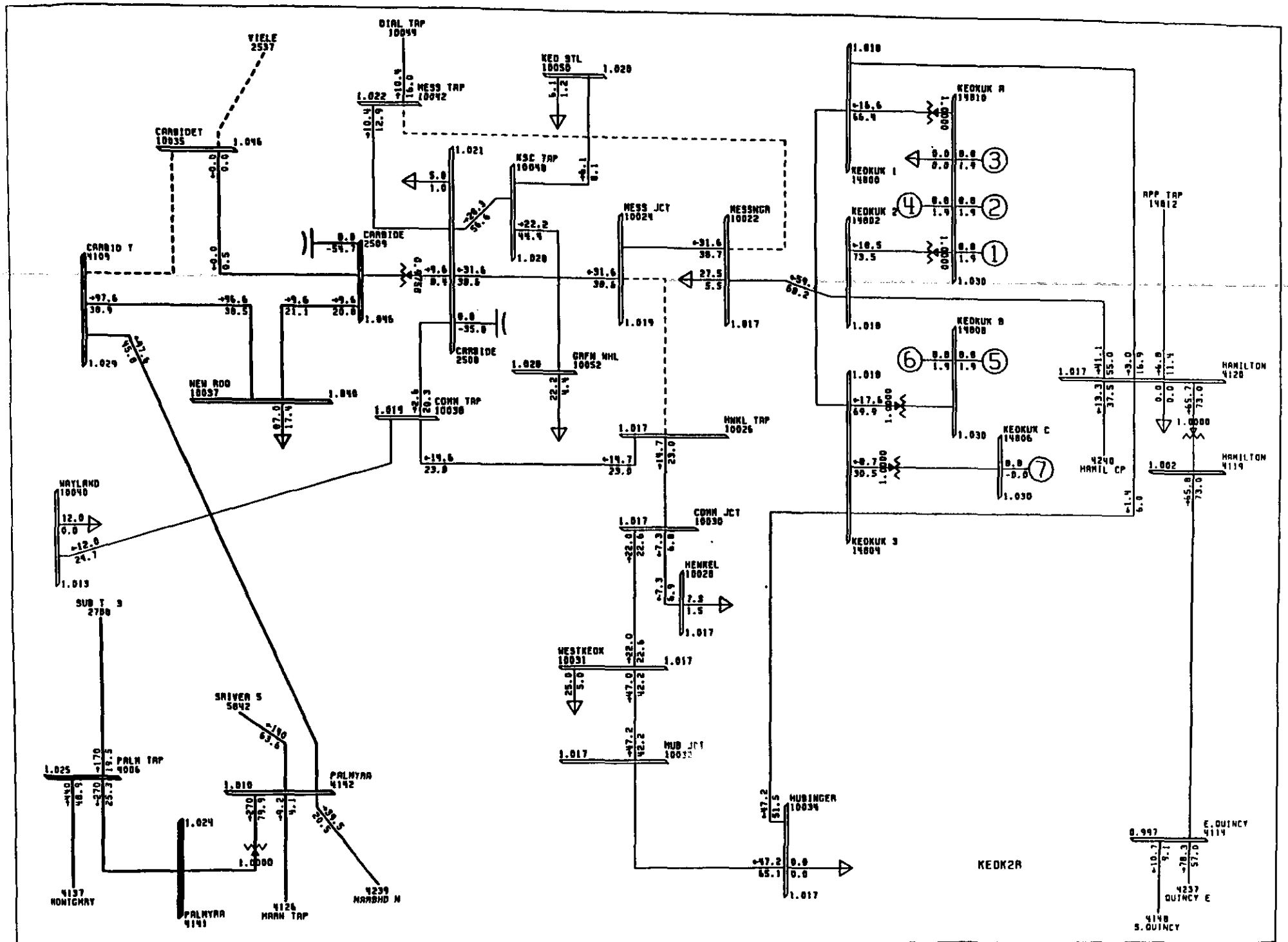

2006B 161KV PLAN, NEW CARB-MESS LINE, ALL CAPS
CONT 5: LOSS OF CARBIDE - VIELE

100% RATEA
0.925UV 1.060OV

BUS - VOLTAGE(PU)
BRANCH - MW/% OF RATE A
EQUIPMENT - MW/MVAR

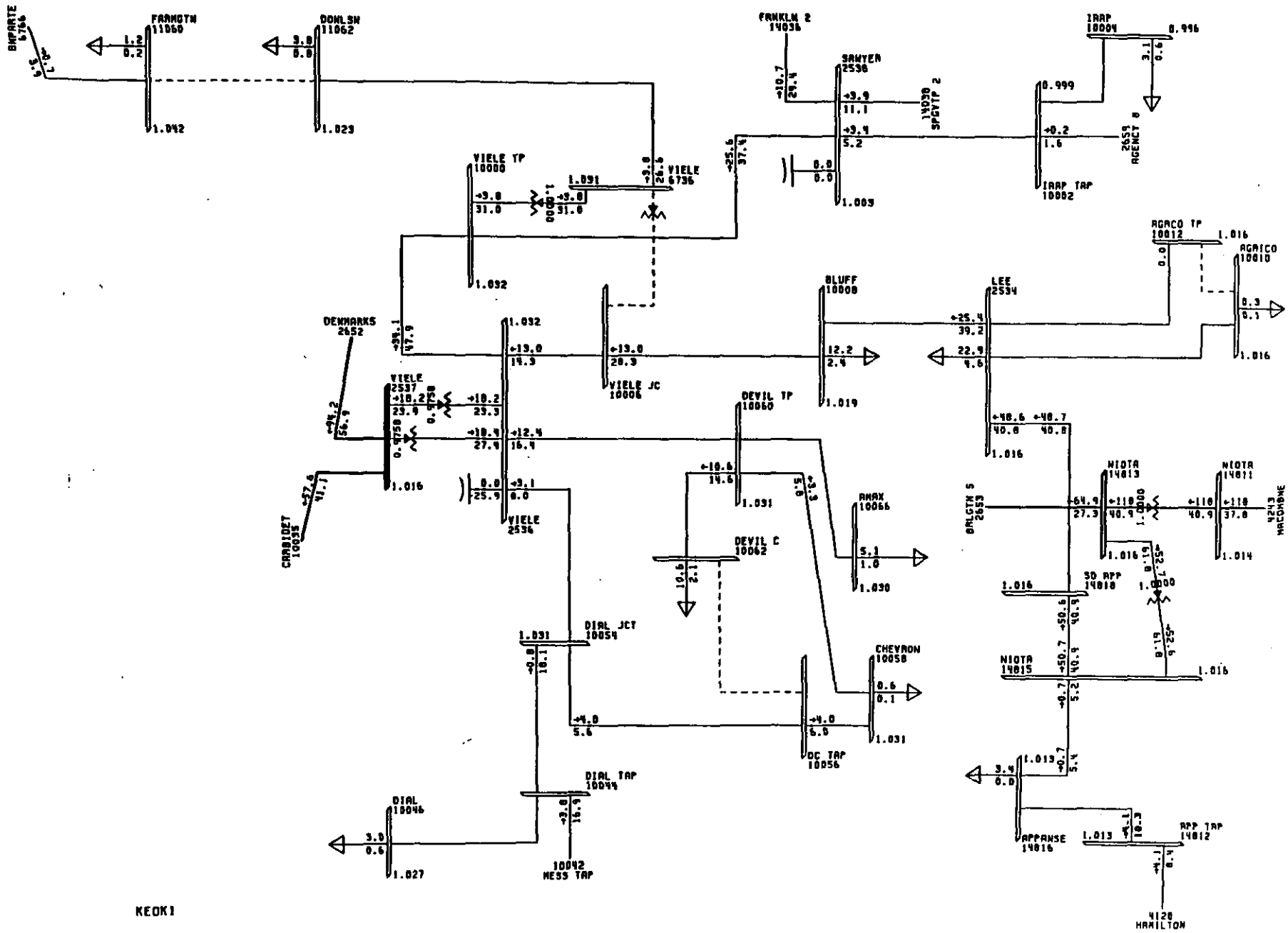

2006B 161KV PLAN, NEW CARB-MESS LINE, ALL CAPS
CONT 4: LOSS OF CARBIDE T - NEW ROQUETTE
MON, JUN 05 1995 07:47

100% RATER
0.925UV 1.060 OV
KV: ≤72 ,≤141 ,≤167

BUS - VOLTAGE (PU)
BRANCH - MW/% OF RATE A
EQUIPMENT - MW/MVAR

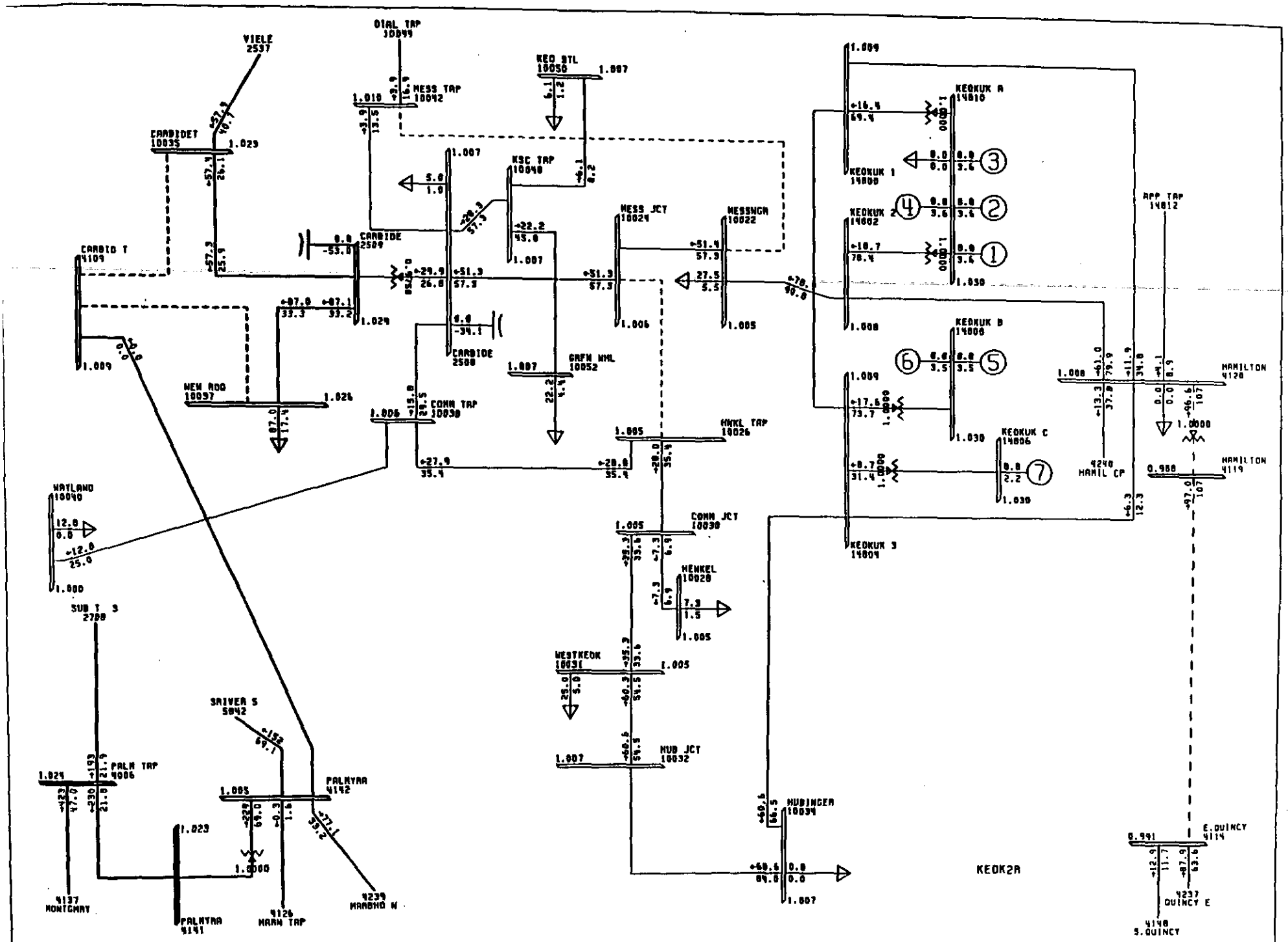

2006B 161KV PLAN, NEW CARB-MESS LINE, ALL CAPS
CONT 4: LOSS OF CARBIDE T - NEW ROQUETTE

100% RATEA
0.925UV 1.060OV
KV: 141 167

BUS - VOLTAGE (PU)
BRANCH - MW/% OF RATE A
EQUIPMENT - MW/MVAR

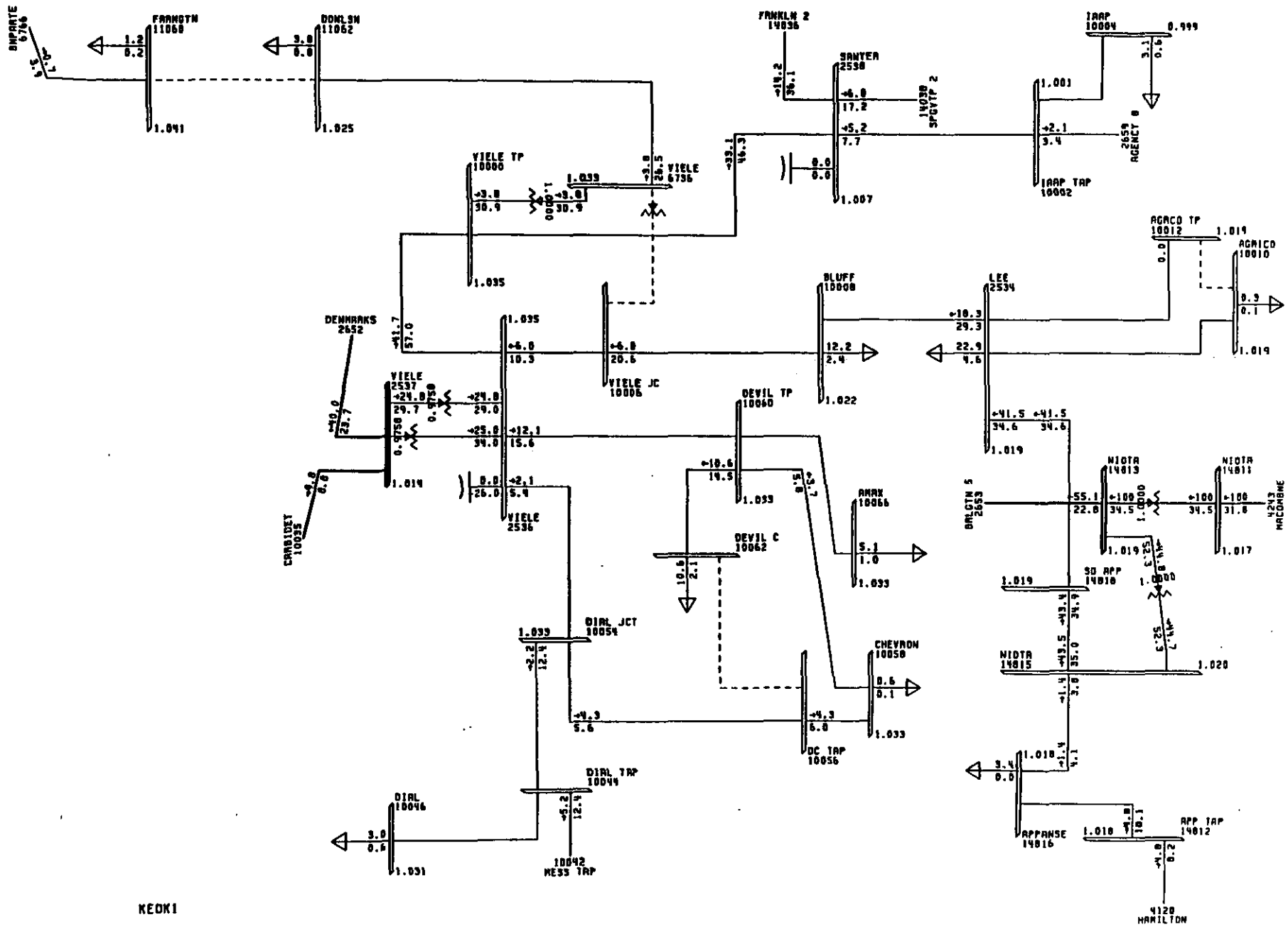

2006B 161KV PLAN, NEW CARB-MESS LINE, ALL CAPS
CONT 3: LOSS OF CARBIDE XFMR
MON, JUN 05 1995 07:46

100% RATEA
0.925UV 1.060OV
KV: ≤72 , ≤141 , ≤167

BUS - VOLTAGE (PU)
BRANCH - MW/% OF RATE A
EQUIPMENT - MW/MVAR

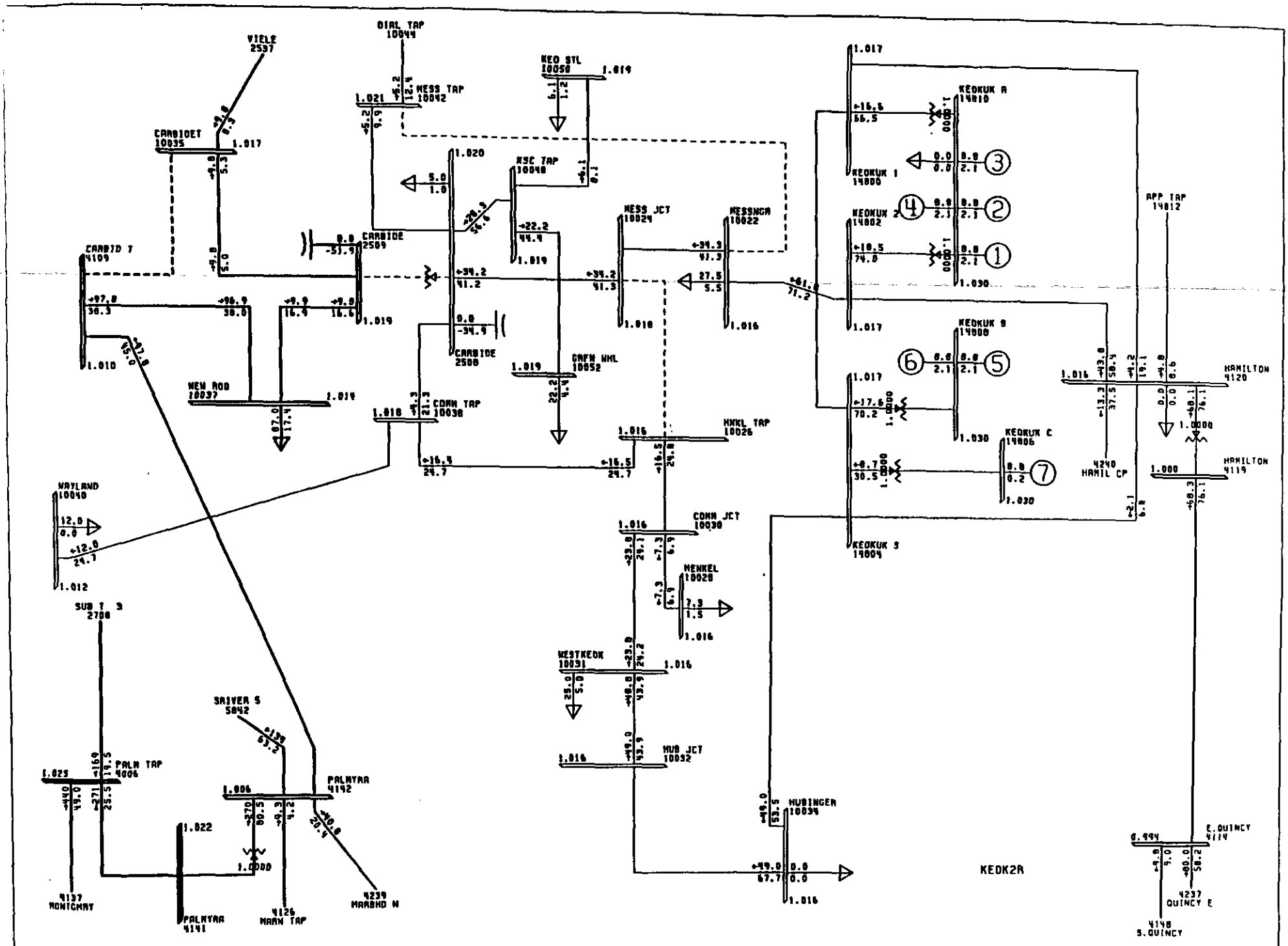

2006B 161KV PLAN, NEW CARB-MESS LINE, ALL CAPS
CONT 3: LOSS OF CARBIDE XFMR

100% RATER
0.925UV 1.060OV
KV <72 <141 <167

BUS - VOLTAGE (PU)
BRANCH - MW/% OF RATE
EQUIPMENT - MW/MVAR

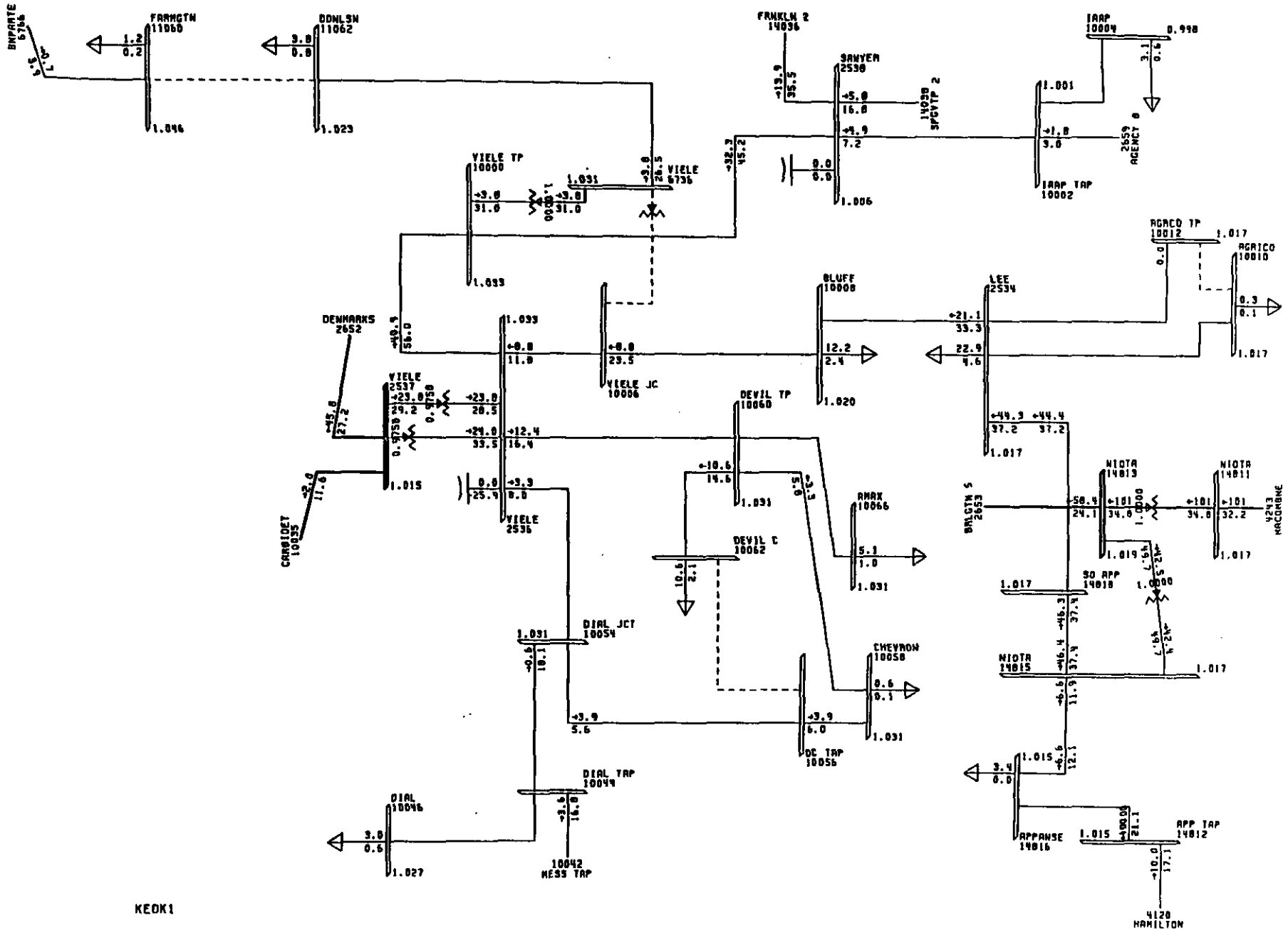

2006B 161KV PLAN, NEW CARB-MESS LINE, ALL CAPS
CONT 1: LOSS OF NEW HYDRO-ROQUETTE LINE
MON, JUN 05 1995 07:46

100% RATEA
0.925 UV 1.060 OV
KV: ≤72 , ≤141 , ≤167

BUS - VOLTAGE (PU)
BRANCH - MW/% OF RATE A
EQUIPMENT - MW/MVAR

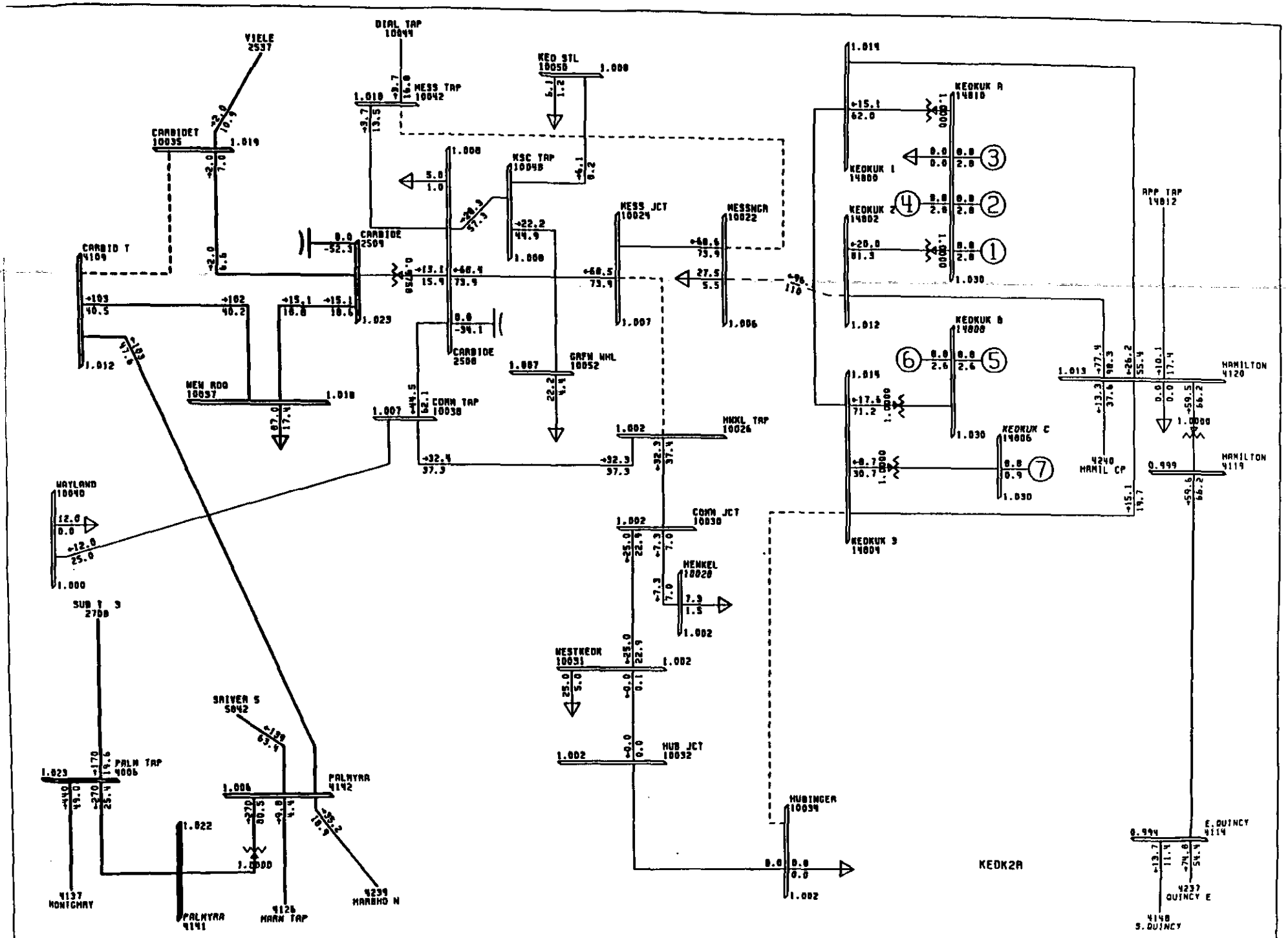

2006B 161KV PLAN, NEW CARB-MESS LINE, ALL CAPS
CONT 1: LOSS OF NEW HYDRO-ROQUETTE LINE

100% RATEA
0.925UV 1.060OV

BUS - VOLTAGE (PU)
BRANCH - MW/% OF RATE A
EQUIPMENT - MW/MVAR

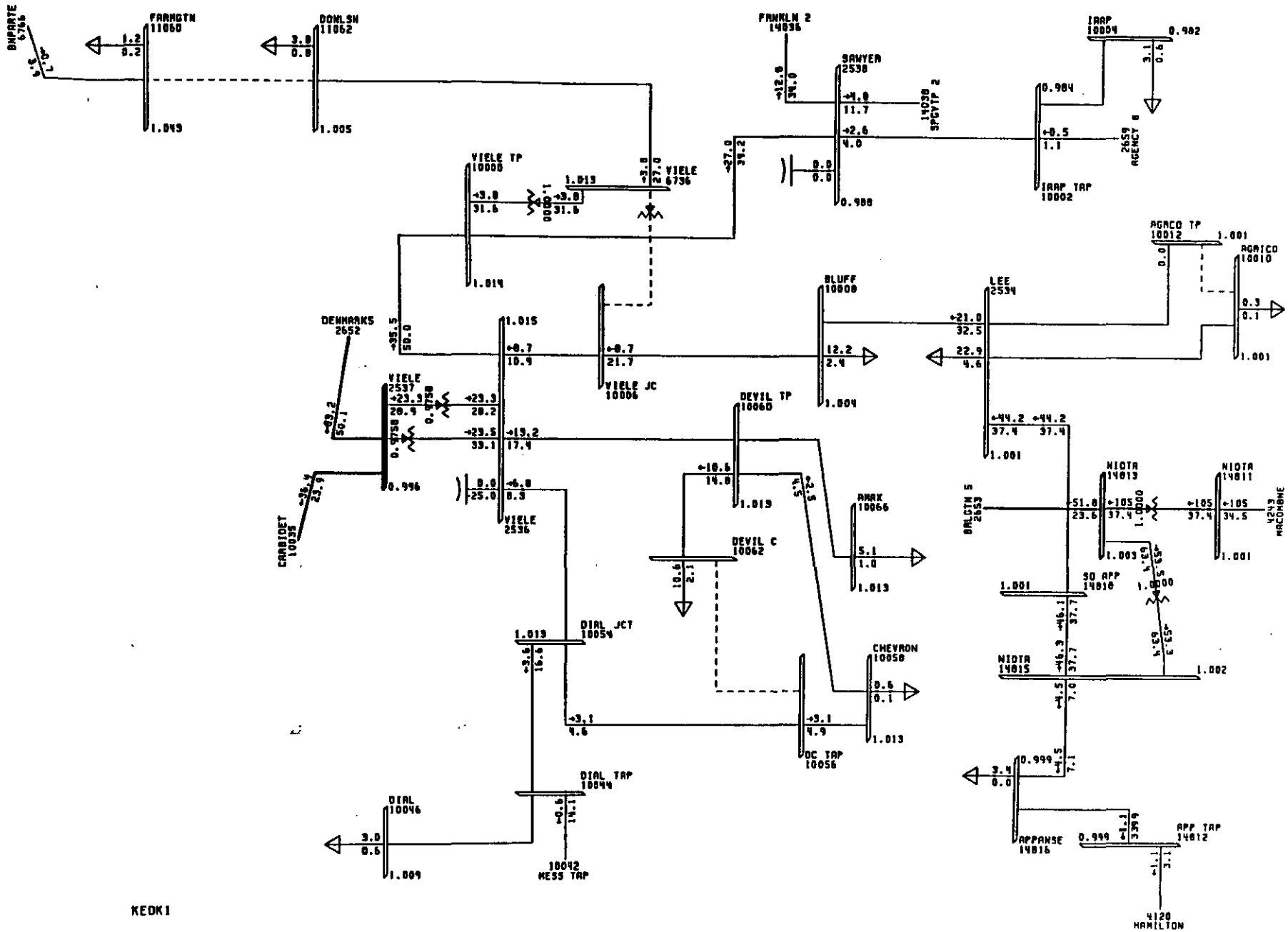

2006B 161KV PLAN, NEW CARB-MESS LINE, ALL CAPS
CONT 2: LOSS OF PALMYRA 345/161
MON, JUN 05 1995 07:46

100% RATEA
0.925UV 1.060 OV
KV: ≤72 ,≤141 ,≤167

BUS - VOLTAGE (PU)
BRANCH - MW/% OF RATE A
EQUIPMENT - MW/MVAR

POWER TECHNOLOGIES, INC.

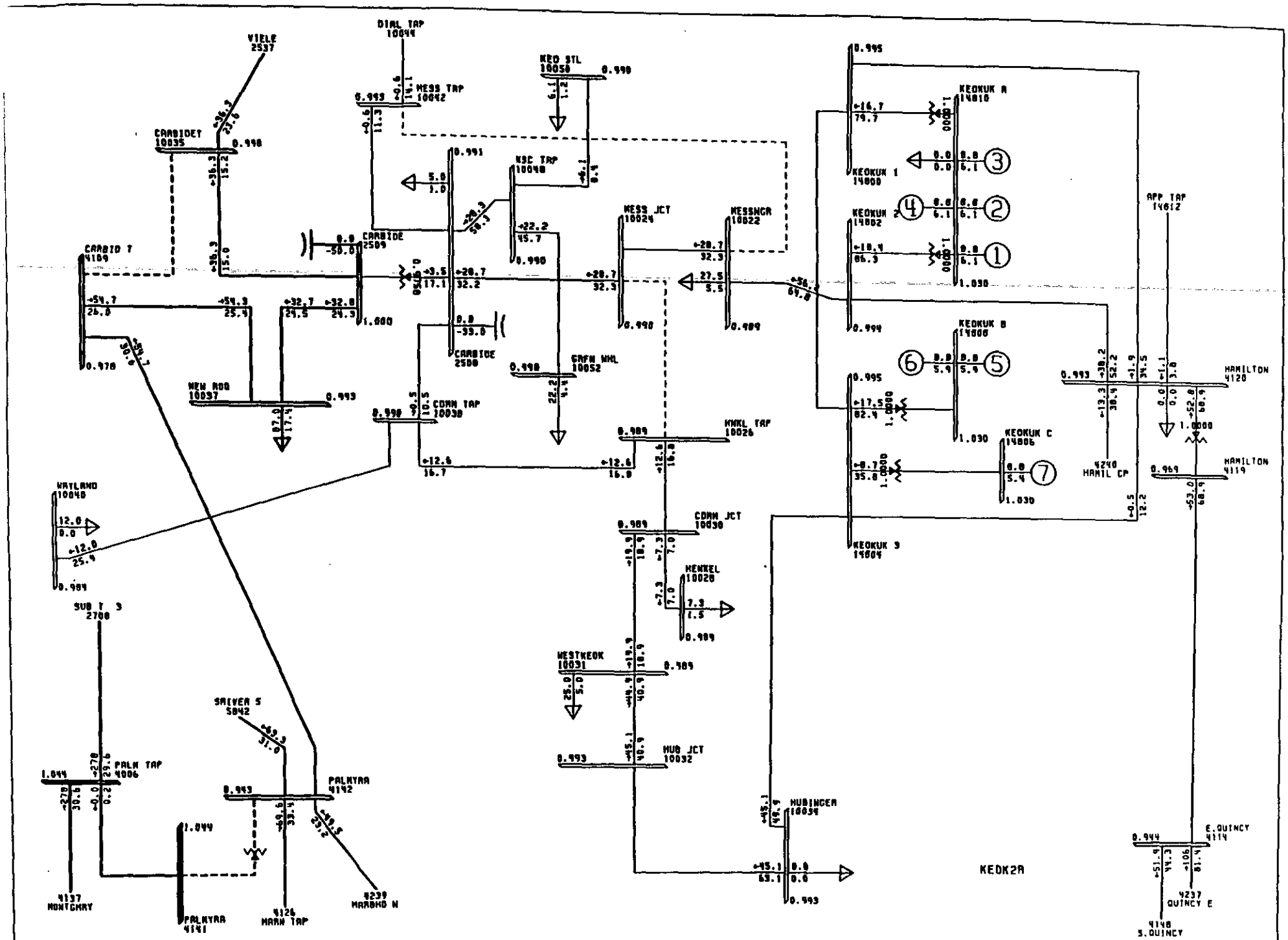

2006B 161KV PLAN, NEW CARB-MESS LINE, ALL CAPS
CONT 2: LOSS OF PALMYRA 345/161

100% RATER
0.925UV 1.050OV
KV

BUS - VOLTAGE (PU)
BRANCH - MW/% OF RATE A
EQUIPMENT - MW/MVAR

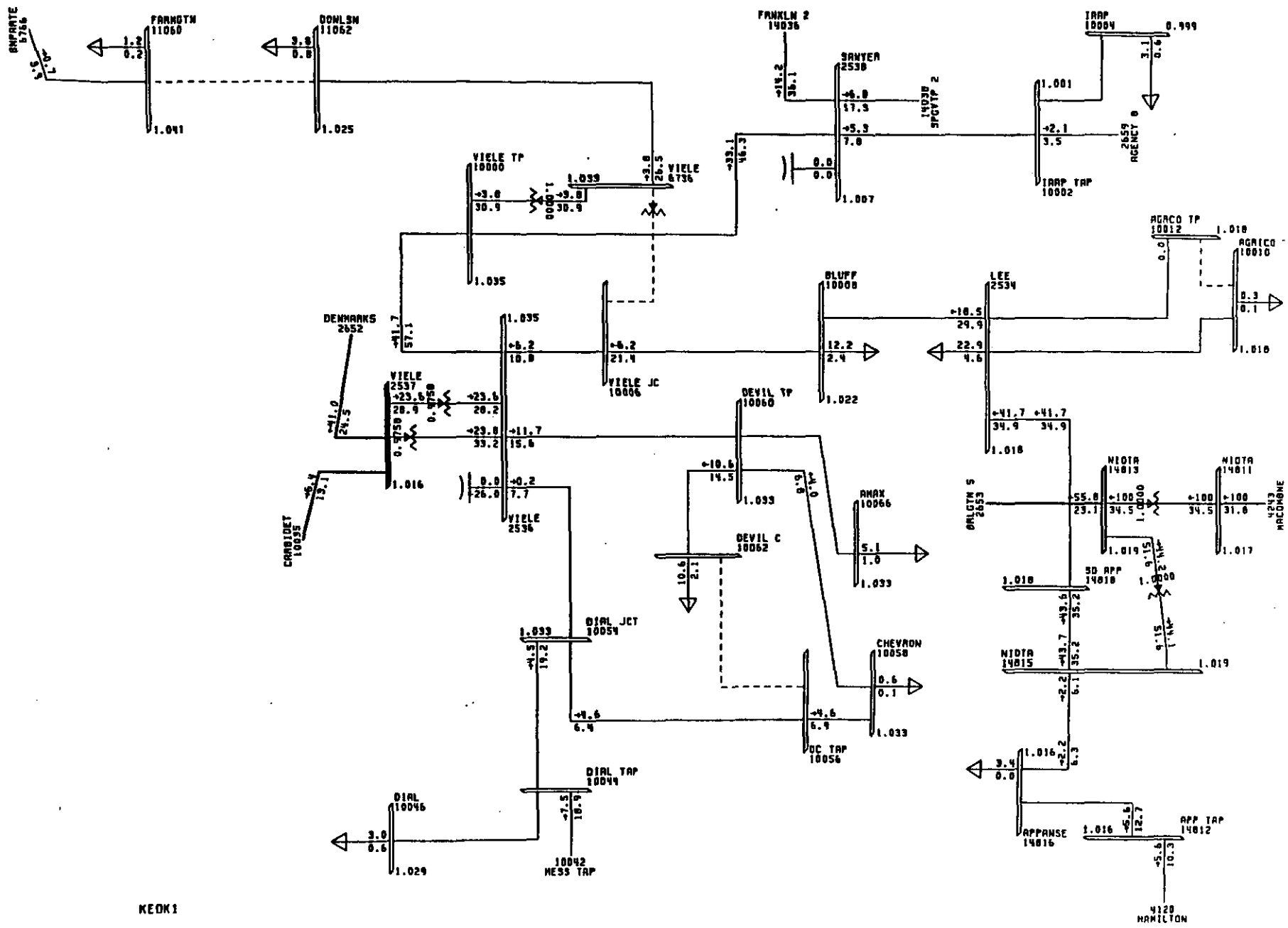

2006B 161KV PLAN, NEW CARB-MESS LINE, ALL CAPS
BASE CASE
MON, JUN 05 1995 07:46

100% RATEA
0.925UV 1.060OV
KV: ≤72 ,≤141 ,≤167

BUS - VOLTAGE (PU)
BRANCH - MW/% OF RATE A
EQUIPMENT - MW/MVAR

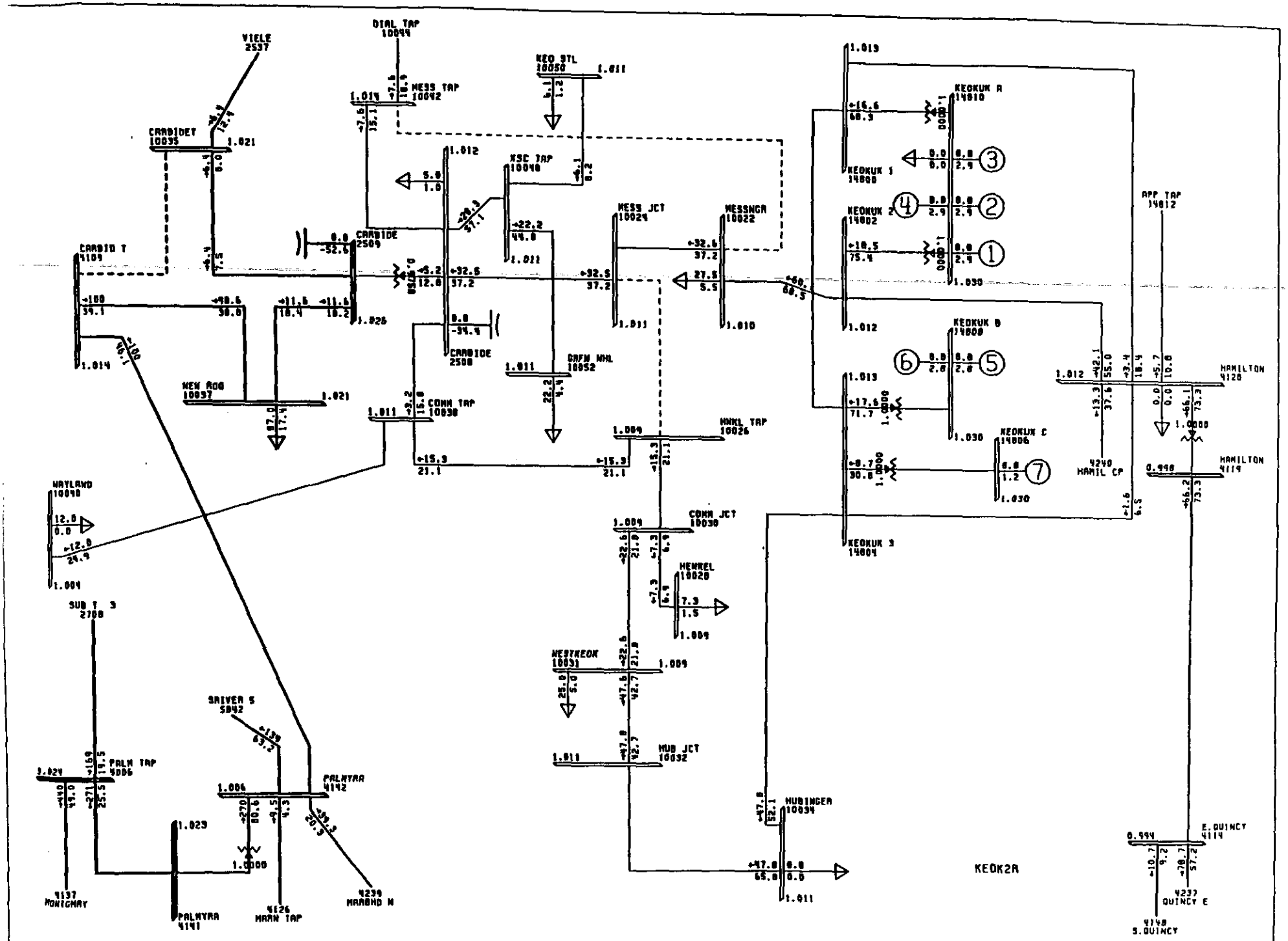

2006B 161KV PLAN, NEW CARB-MESS LINE, ALL CAPS

100% RATEA
0.925UV 1.060 OV

BUS - VOLTAGE (PU)
BRANCH - MW/% OF RATE A
EQUIPMENT - MW/MVAR

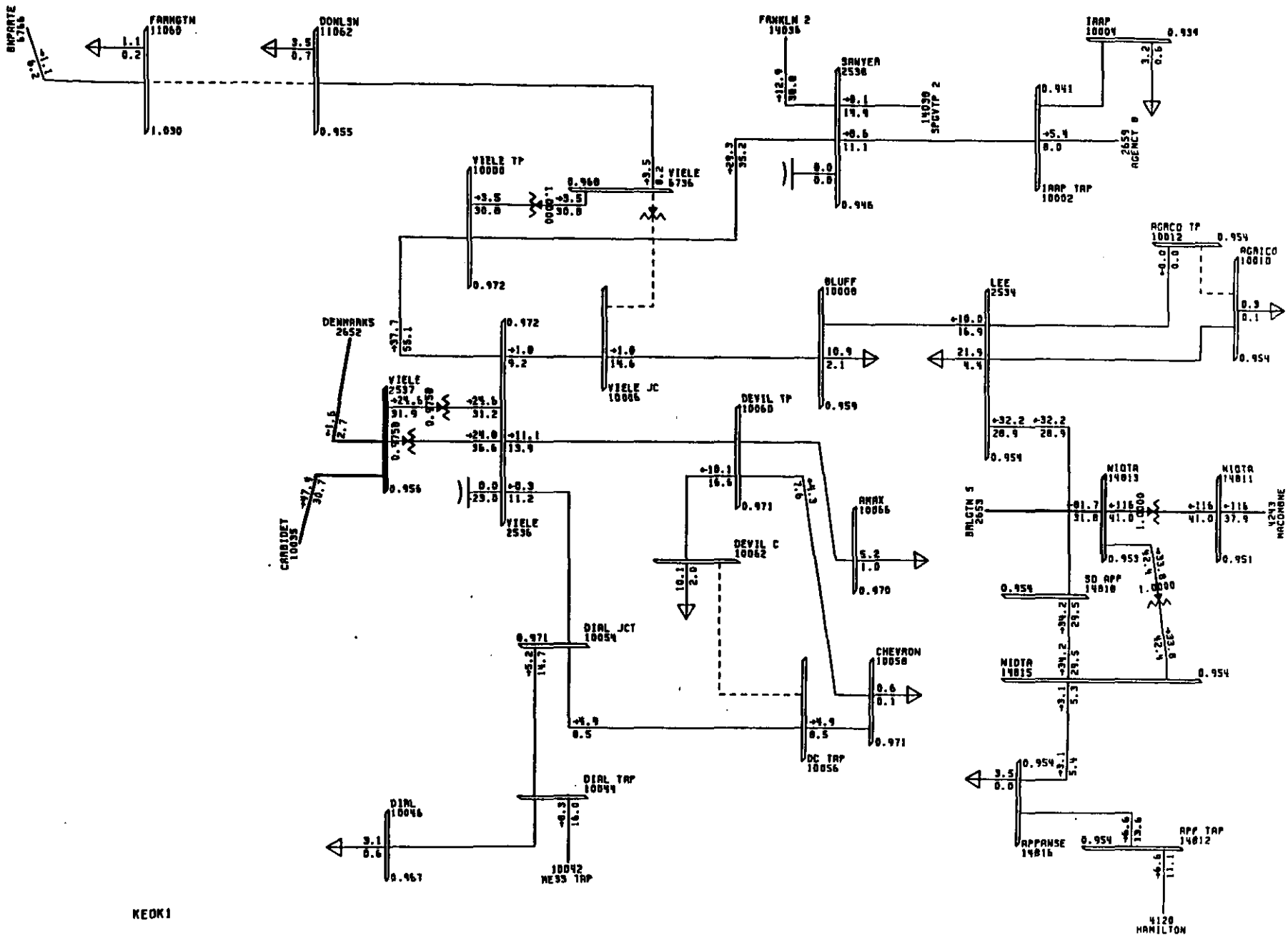

1998B 69KV PLAN, NEW CARB-MESS LINE, 24.3MVAR BGS 69 CONT 7: BGS OUTAGE FRI, JUN 02 1995 16:01	100% RATE A 0.925UV 1.060 OV KV: ≤72 ,≤141 ,≤167	BUS - VOLTAGE (PU) BRANCH - MW/% OF RATE A EQUIPMENT - MW/MVAR

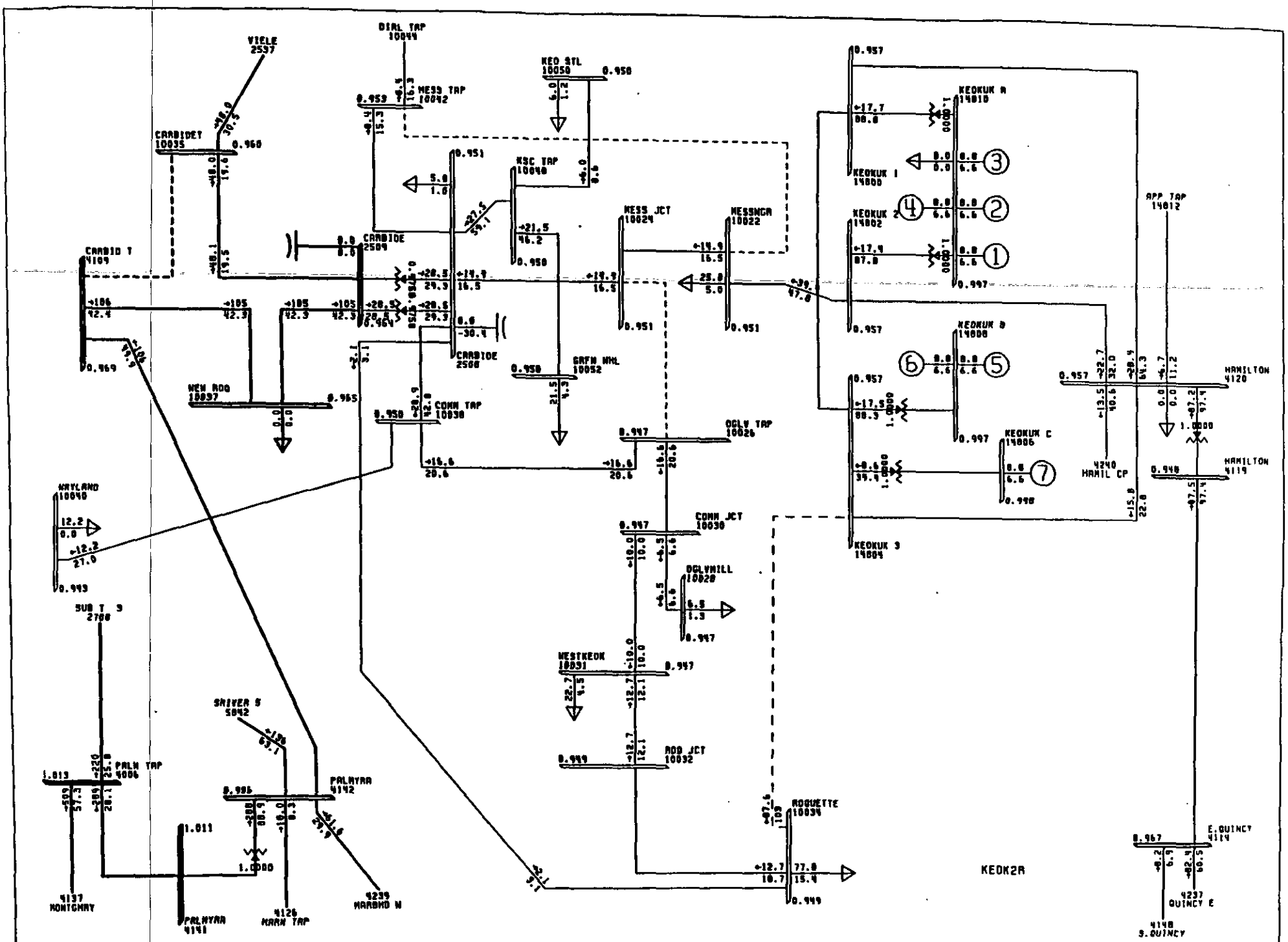

1998B 69KV PLAN, NEW CARB-MESS LINE, 24.3MVAR BGS 69
CONT 7: BGS OUTAGE

100% RATEA
0.925UV 1.060 OV
KV 69 ≤1.41 ≥1.67

BUS - VOLTAGE (PU)
BRANCH - MW/% OF RATE A
EQUIPMENT - MW/MVAR

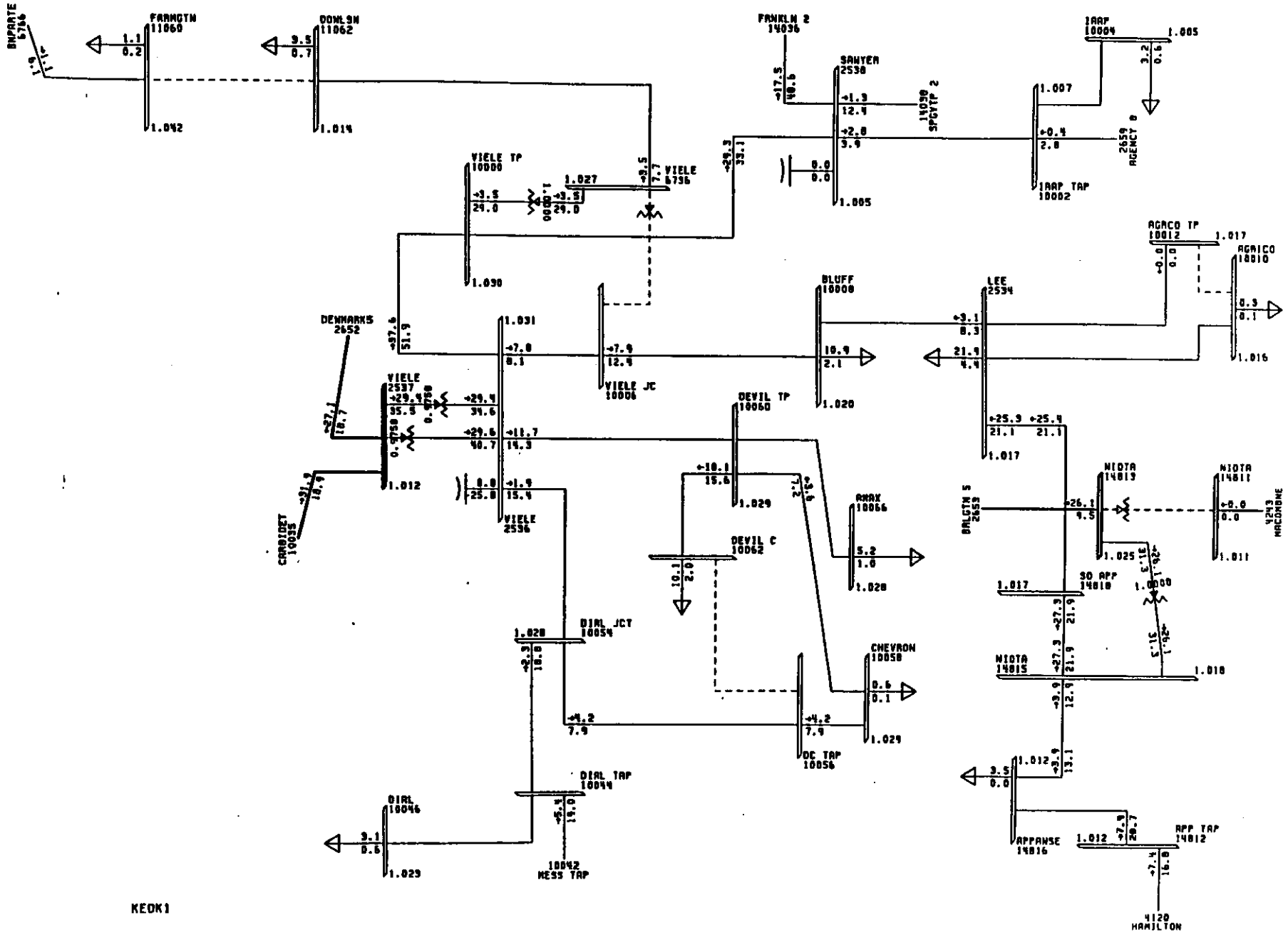

1998B 69KV PLAN, NEW CARB-MESS LINE, 24.3MVAR BGS 69
CONT 6: LOSS OF NIOTA XFMR
FRI, JUN 02 1995 16:01

100% RATEA
0.925UV 1.060 OV
KV: ≤72 ,≤141 ,≤167

BUS - VOLTAGE (PU)
BRANCH - MW/% OF RATE A
EQUIPMENT - MW/MVAR

POWER TECHNOLOGIES, INC.

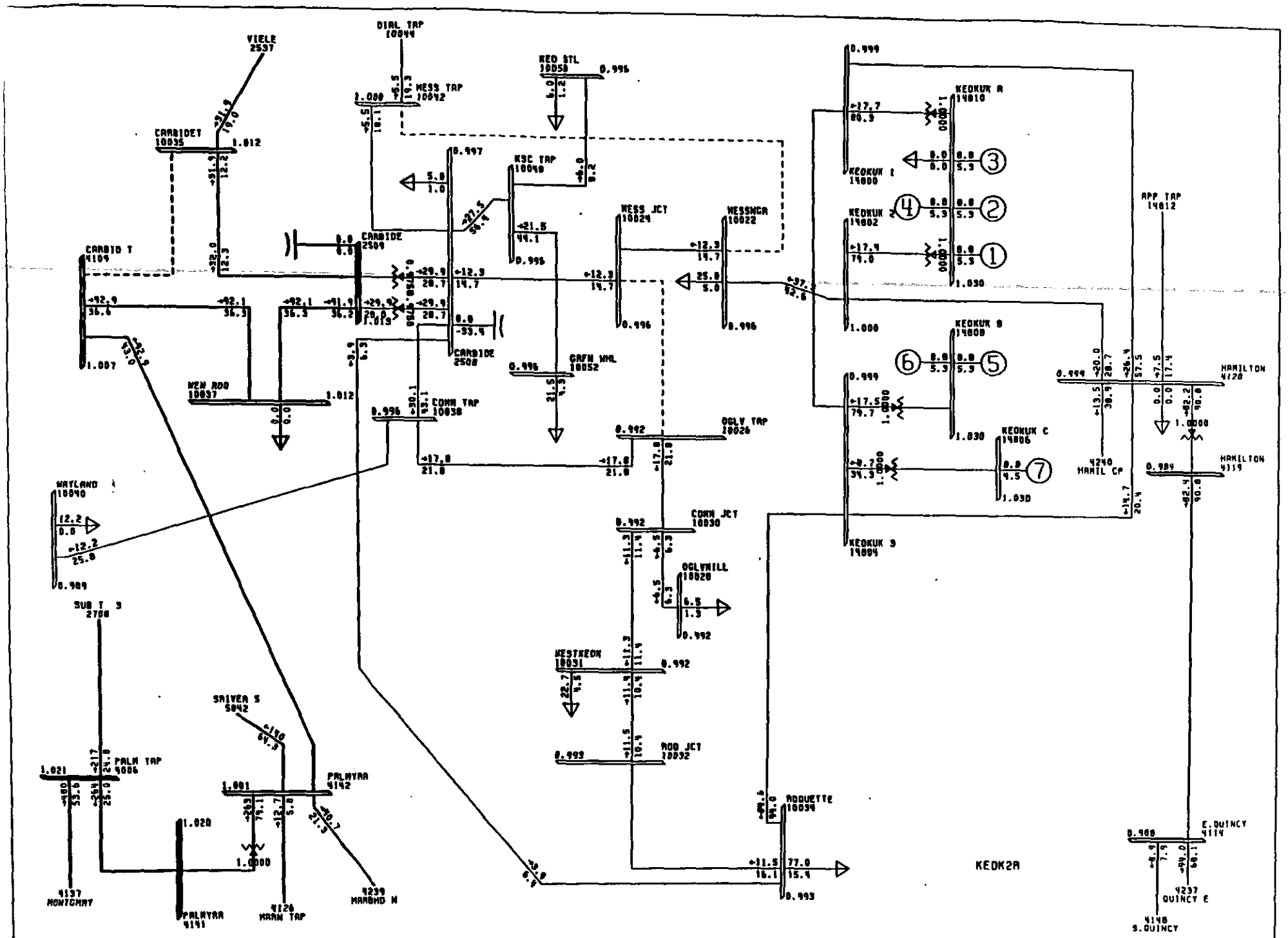

1998B 69KV PLAN, NEW CARB-MESS LINE, 24.3MVAR BGS 69
CONT 6: LOSS OF NIOTA XFMR

100% RATEA
0.925UV 1.060 OV
KV: <72 <141 <167

BUS - VOLTAGE (PU)
BRANCH - MW/% OF RATE A
EQUIPMENT - MW/MVAR

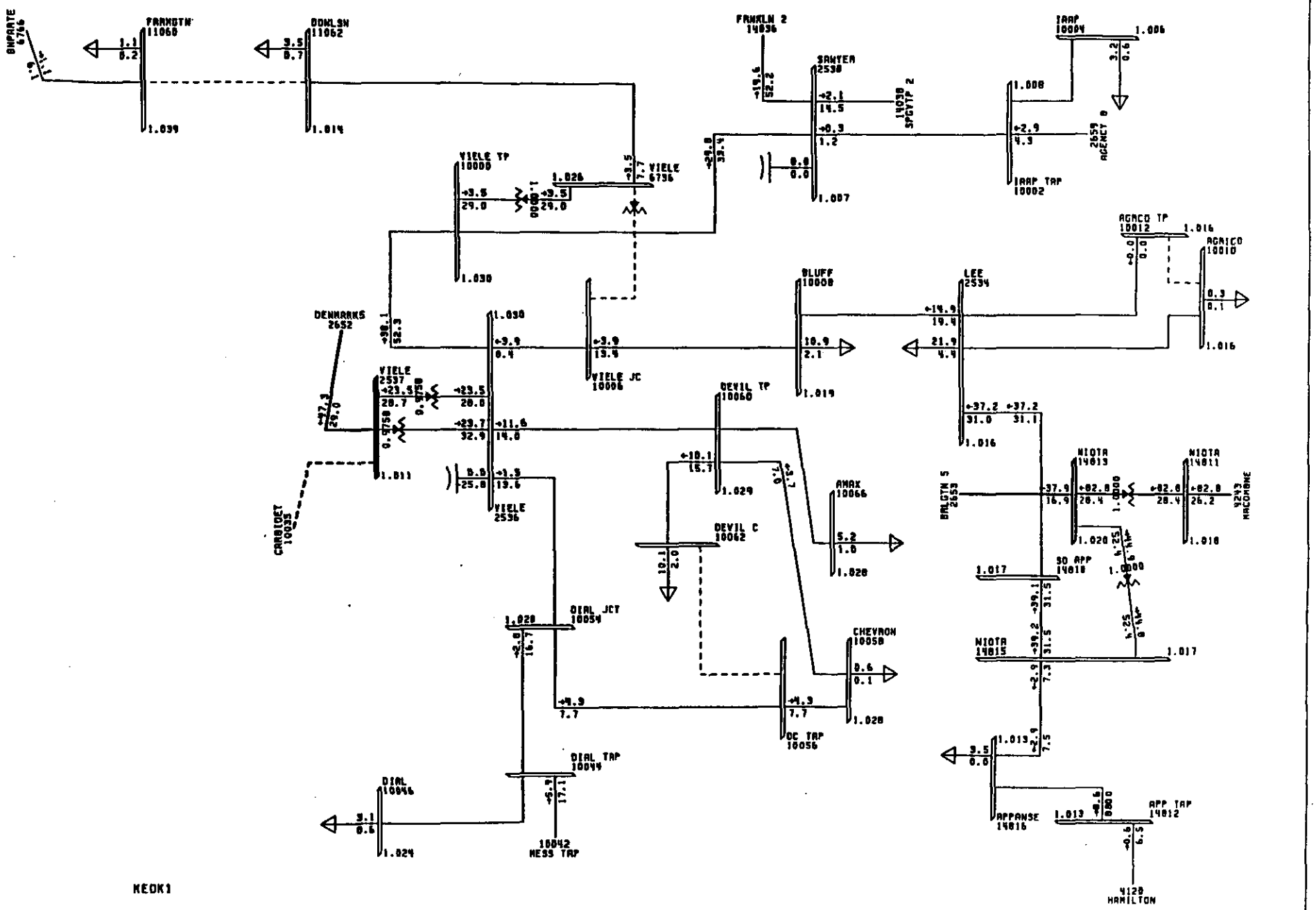

1998B 69KV PLAN, NEW CARB-MESS LINE, 24.3MVAR BGS 69
CONT 5: LOSS OF CARBIDE - VIELE
FRI, JUN 02 1995 16:01

100% RATEA
0.925UV 1.060OV
KV:≤72 ,≤141 ,≤167

BUS - VOLTAGE(PU)
BRANCH - MW/% OF RATE A
EQUIPMENT - MW/MVAR

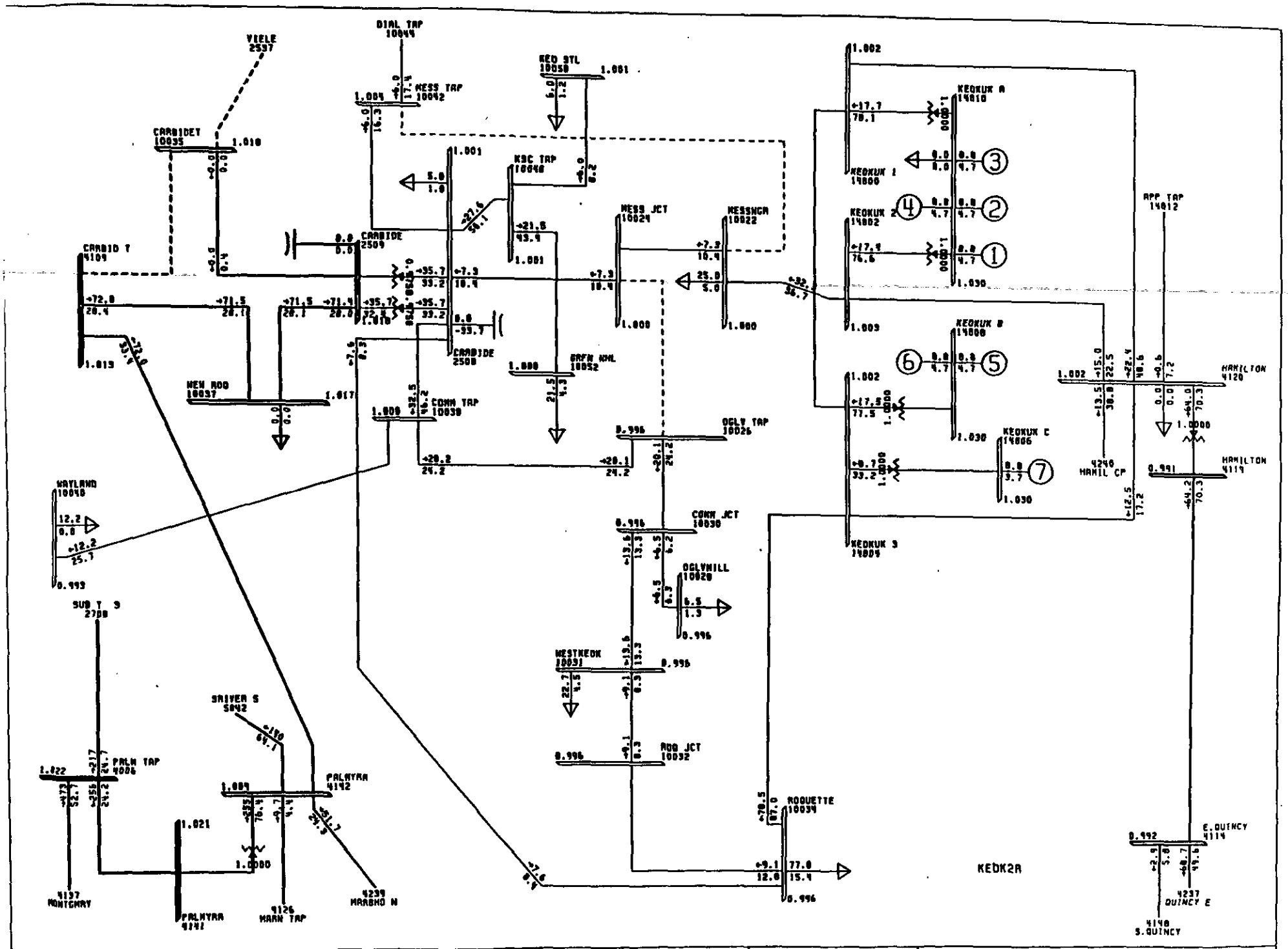

1998B 69KV PLAN, NEW CARB-MESS LINE, 24.3MVAR BGS 69
CONT 5: LOSS OF CARBIDE - VIELE

100% RATEA
0.925UV 1.060OV
KV: ≤72 ≤141 ≤167

BUS - VOLTAGE (PU)
BRANCH - MW/% OF RATE A
EQUIPMENT - MW/MVAR

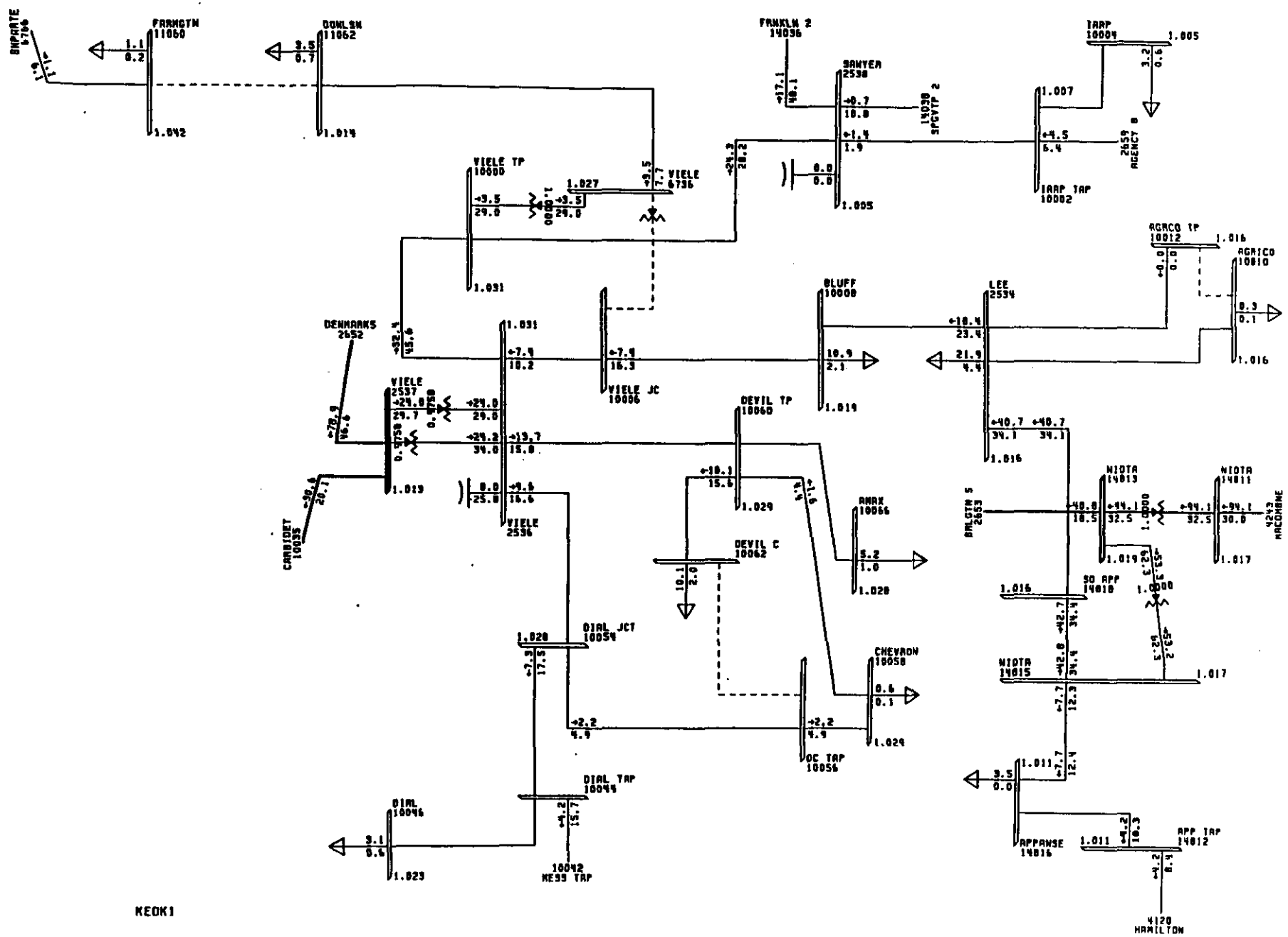

1998B 69KV PLAN, NEW CARB-MESS LINE, 24.3MVAR BGS
CONT 4: LOSS OF CARBIDE T - NEW ROQUETTE
FRI, JUN 02 1995 16:01

100% RATEA
0.925UV 1.060OV
KV: ≤72 ,≤141 ,≤167

BUS - VOLTAGE (PU)
BRANCH - MW/% OF RATE A
EQUIPMENT - MW/MVAR

POWER TECHNOLOGIES, INC.

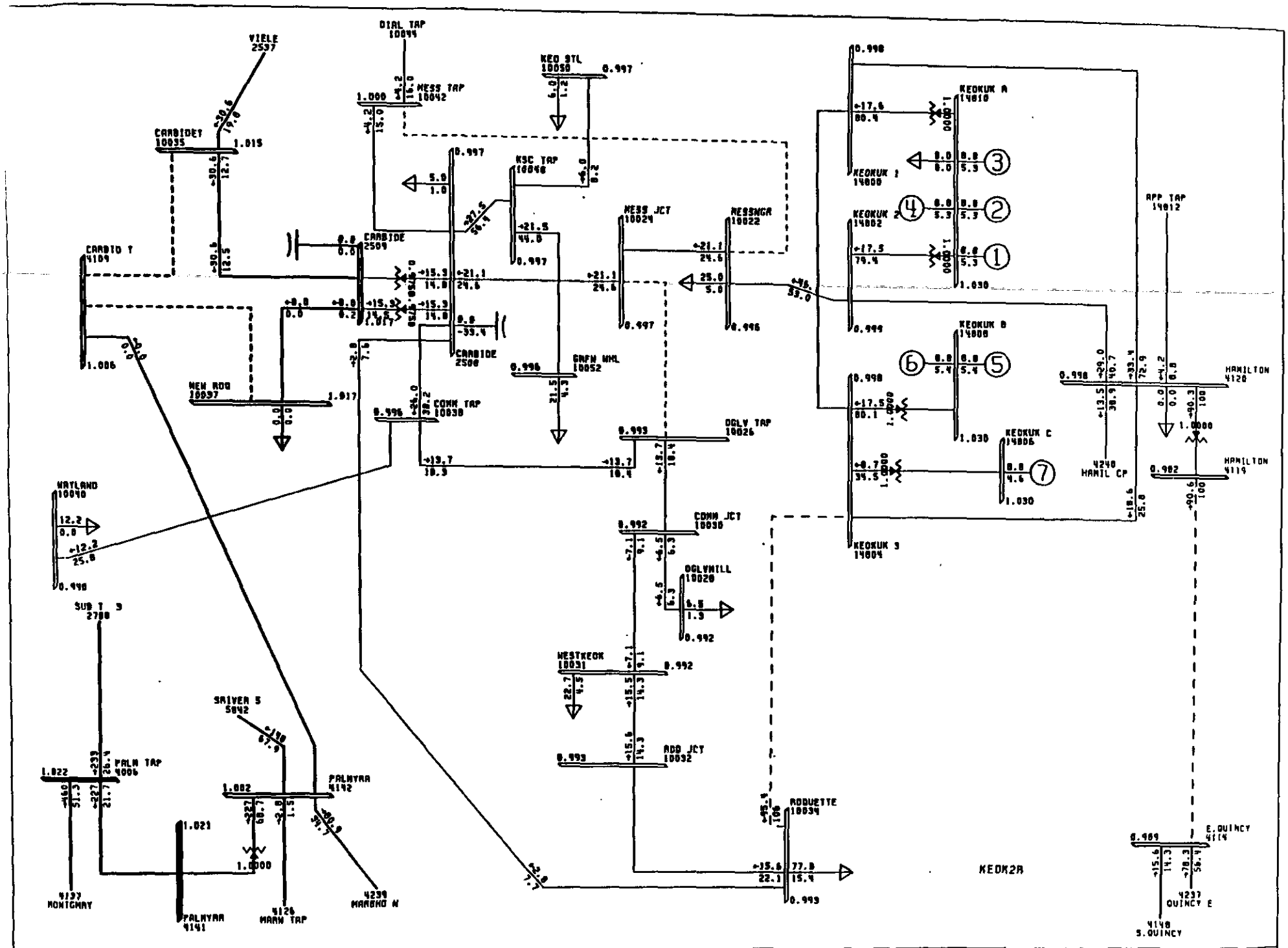

1998B 69KV PLAN, NEW CARB-MESS LINE, 24.3MVAR BGS
CONT 4: LOSS OF CARBIDE T - NEW ROQUETTE

100% RATEA
0.925UV 1.060OV
KV: ≤72 ≤141 ≤167

BUS - VOLTAGE (PU)
BRANCH - MW/% OF RATE A
EQUIPMENT - MW/MVAR

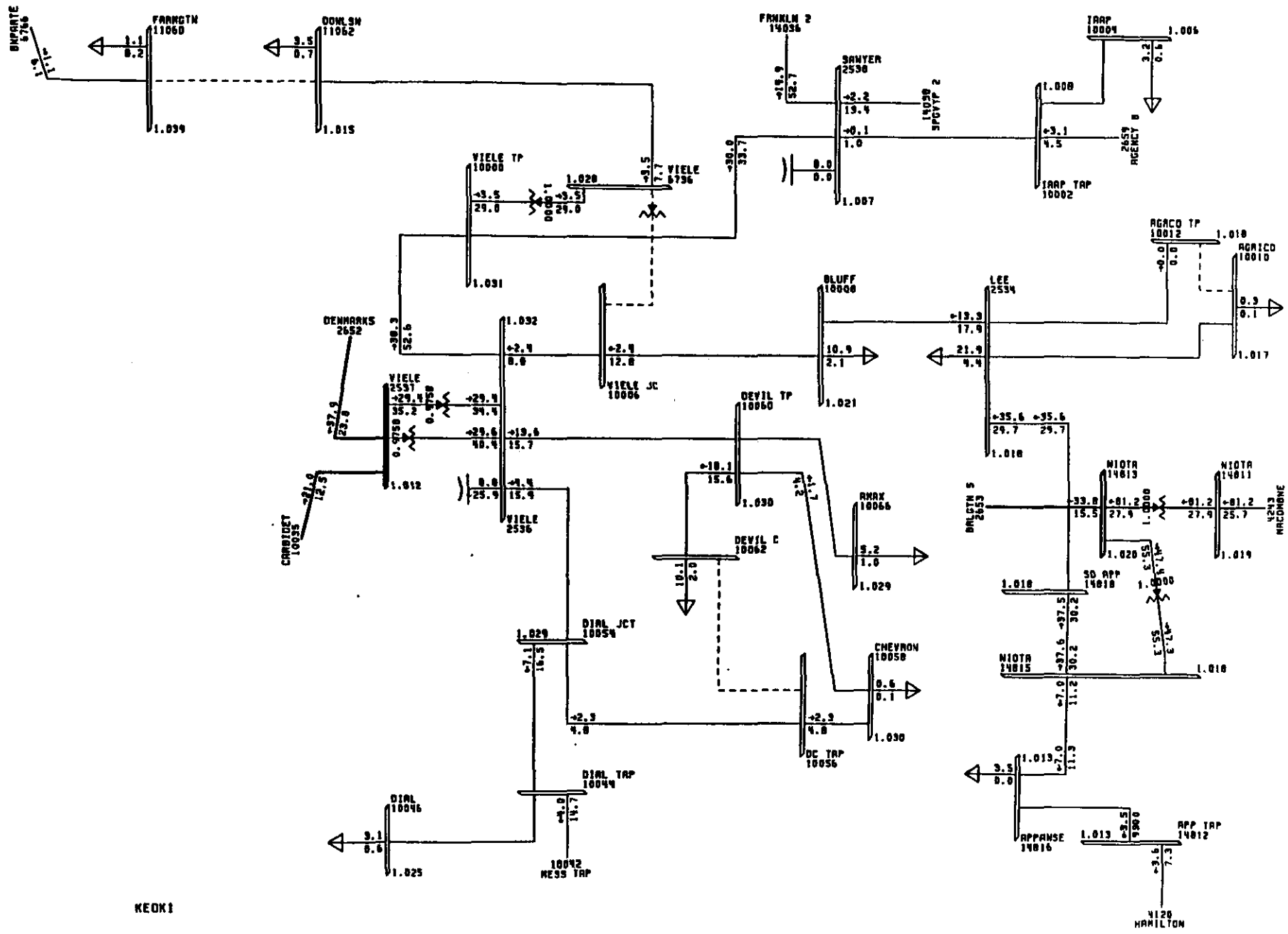

1998B 69KV PLAN, NEW CARB-MESS LINE, 24.3MVAR BGS 69
CONT 3: LOSS OF CARBIDE XFMR
FRI, JUN 02 1995 16:00

100% RATEA
0.925UV 1.060OV
KV:≤72 ,≤141 ,≤167

BUS - VOLTAGE (PU)
BRANCH - MW/% OF RATE A
EQUIPMENT - MW/MVAR

POWER TECHNOLOGIES, INC.

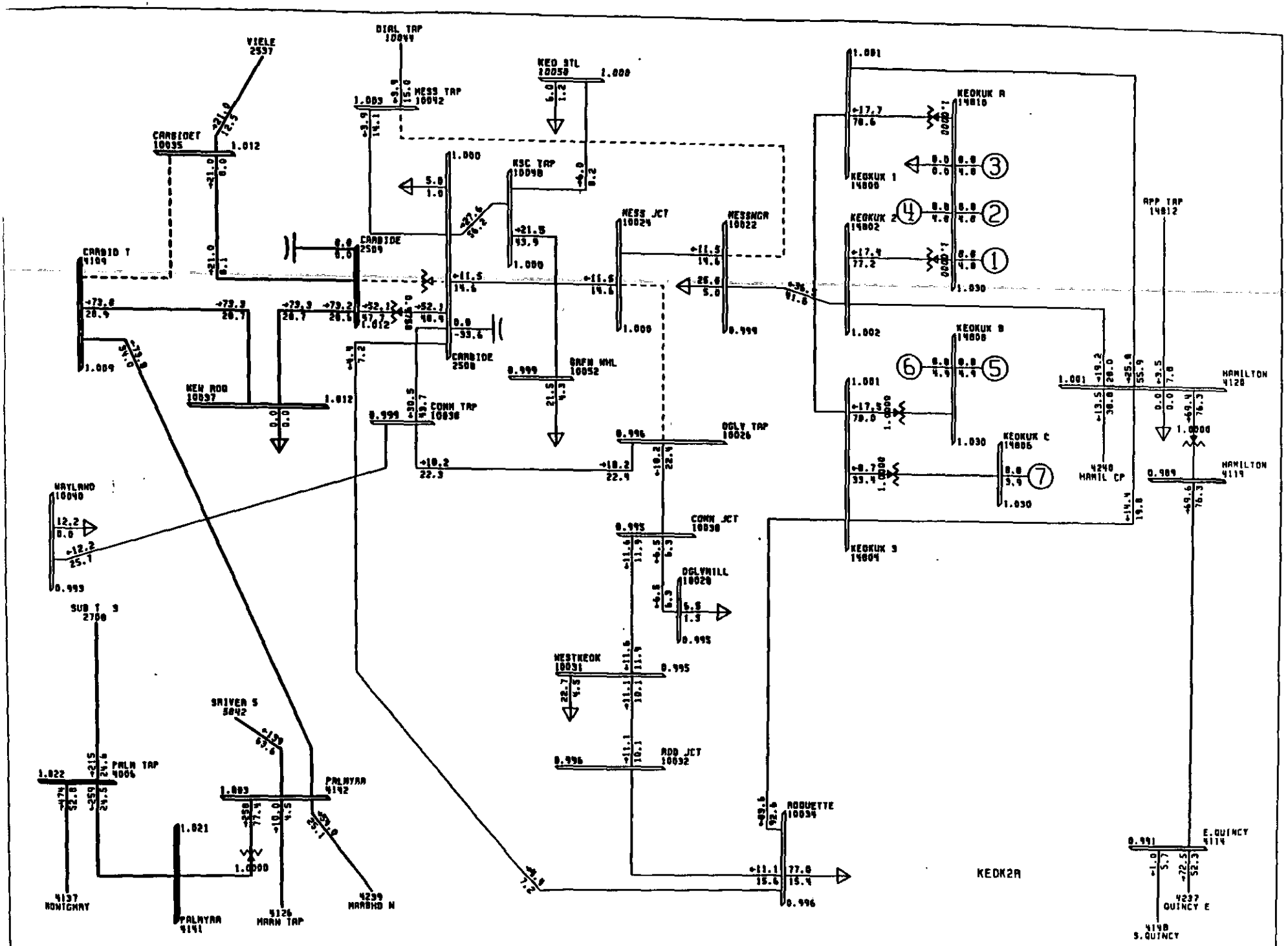

1998B 69KV PLAN, NEW CARB-MESS LINE, 24.3MVAR BGS 69
CONT 3: LOSS OF CARBIDE XFMR

100% RATER
0.925UV 1.060OV
KV: [redacted] 4141 [redacted]167

BUS - VOLTAGE (PU)
BRANCH - MW/% OF RATE A
EQUIPMENT - MW/MVAR

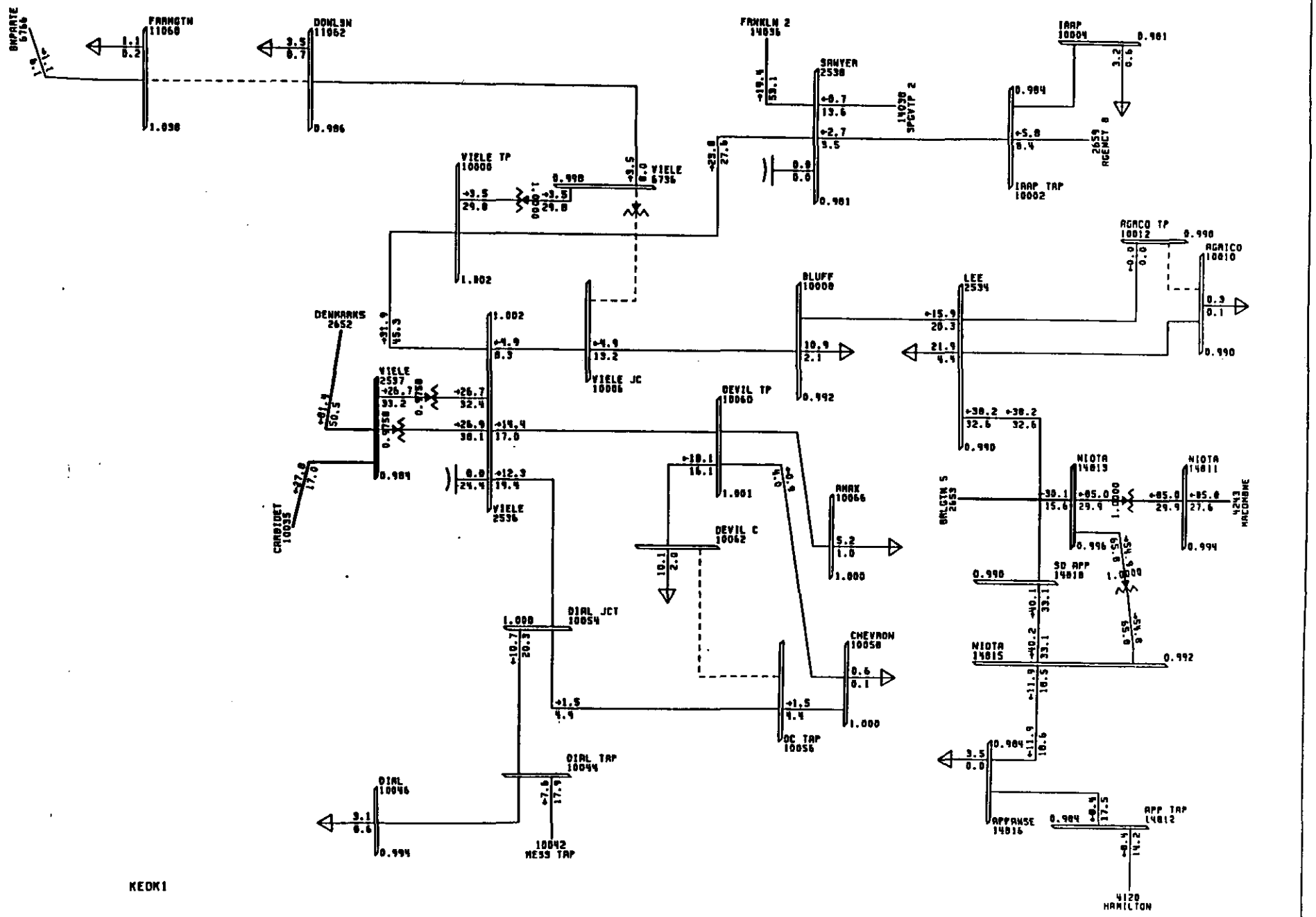

POWER TECHNOLOGIES, INC.	1998B 69KV PLAN, NEW CARB-MESS LINE, 24.3MVAR BGS 69 CONT 2: LOSS OF PALMYRA 345/161 FRI, JUN 02 1995 16:00	100% RATEA 0.925UV 1.060OV KV: ≤72 ,≤141 ,≤167	BUS - VOLTAGE (PU) BRANCH - MW/% OF RATE A EQUIPMENT - MW/MVAR

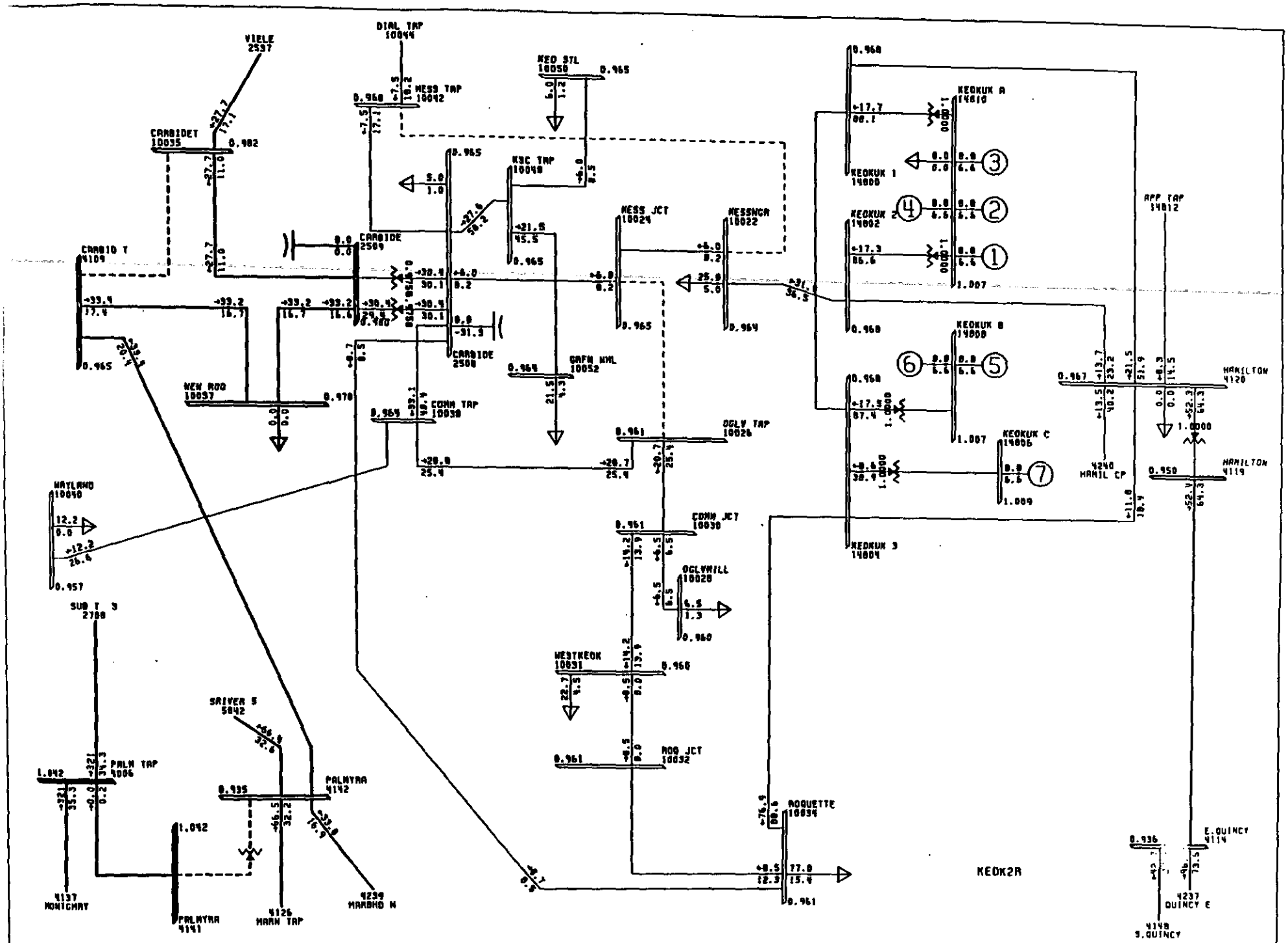

1998B 69KV PLAN, NEW CARB-MESS LINE, 24.3MVAR BGS 69
[redacted] 2: [redacted]OSS OF PALMYRA 345/161

100% RATEA
0.925UV 1.060OV
KV [redacted]

BUS - VOLTAGE (PU)
BRANCH - MW/% OF RATE A
EQUIPMENT - MW/MVAR

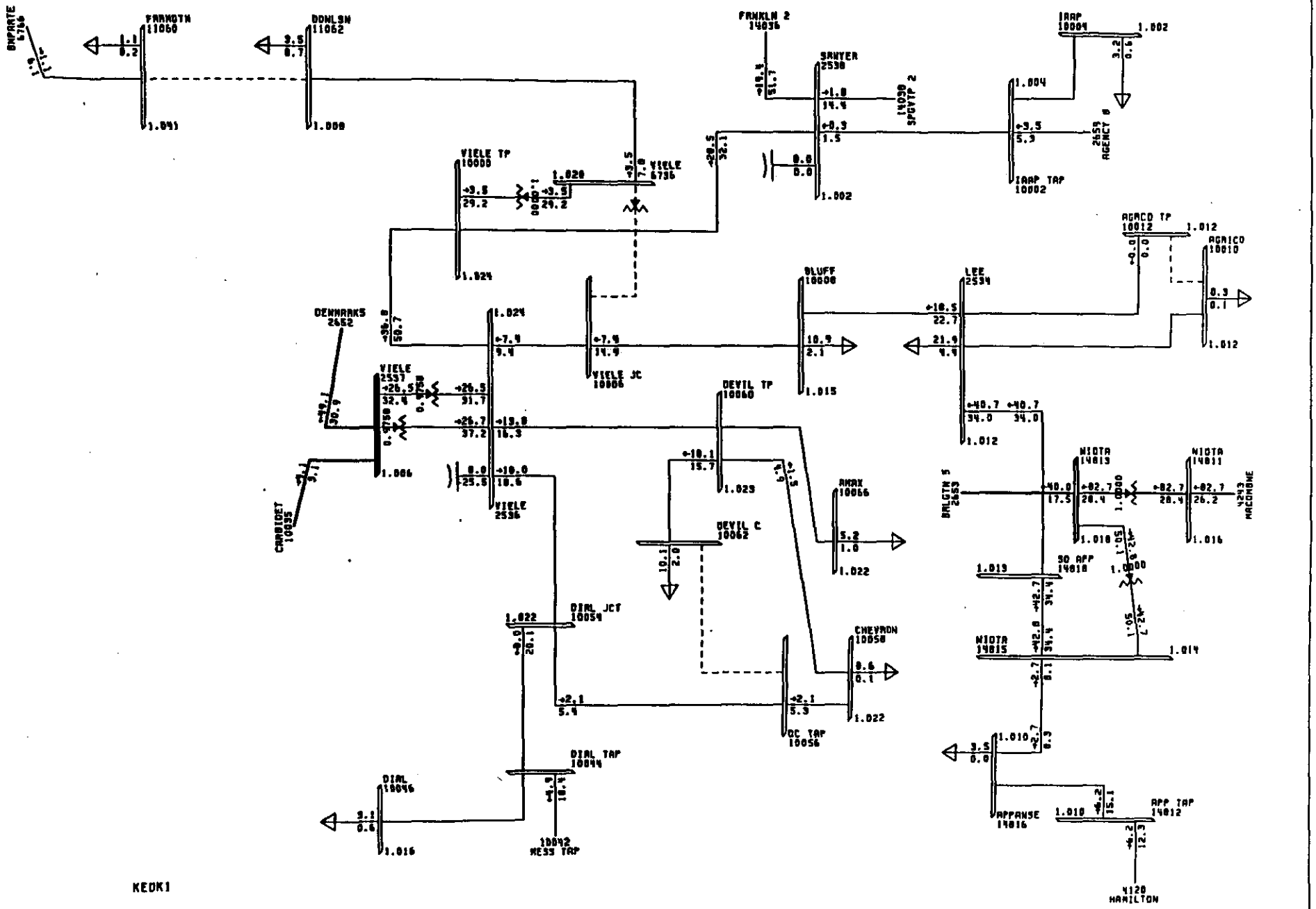

1998B 69KV PLAN, NEW CARB-MESS LINE, 24.3MVAR BGS 69
CONT 1: LOSS OF NEW HYDRO-ROQUETTE LINE
FRI, JUN 02 1995 16:00

100% RATEA
0.925UV 1.060OV
KV: ≤72 , ≤141 , ≤167

BUS - VOLTAGE (PU)
BRANCH - MW/% OF RATE A
EQUIPMENT - MW/MVAR

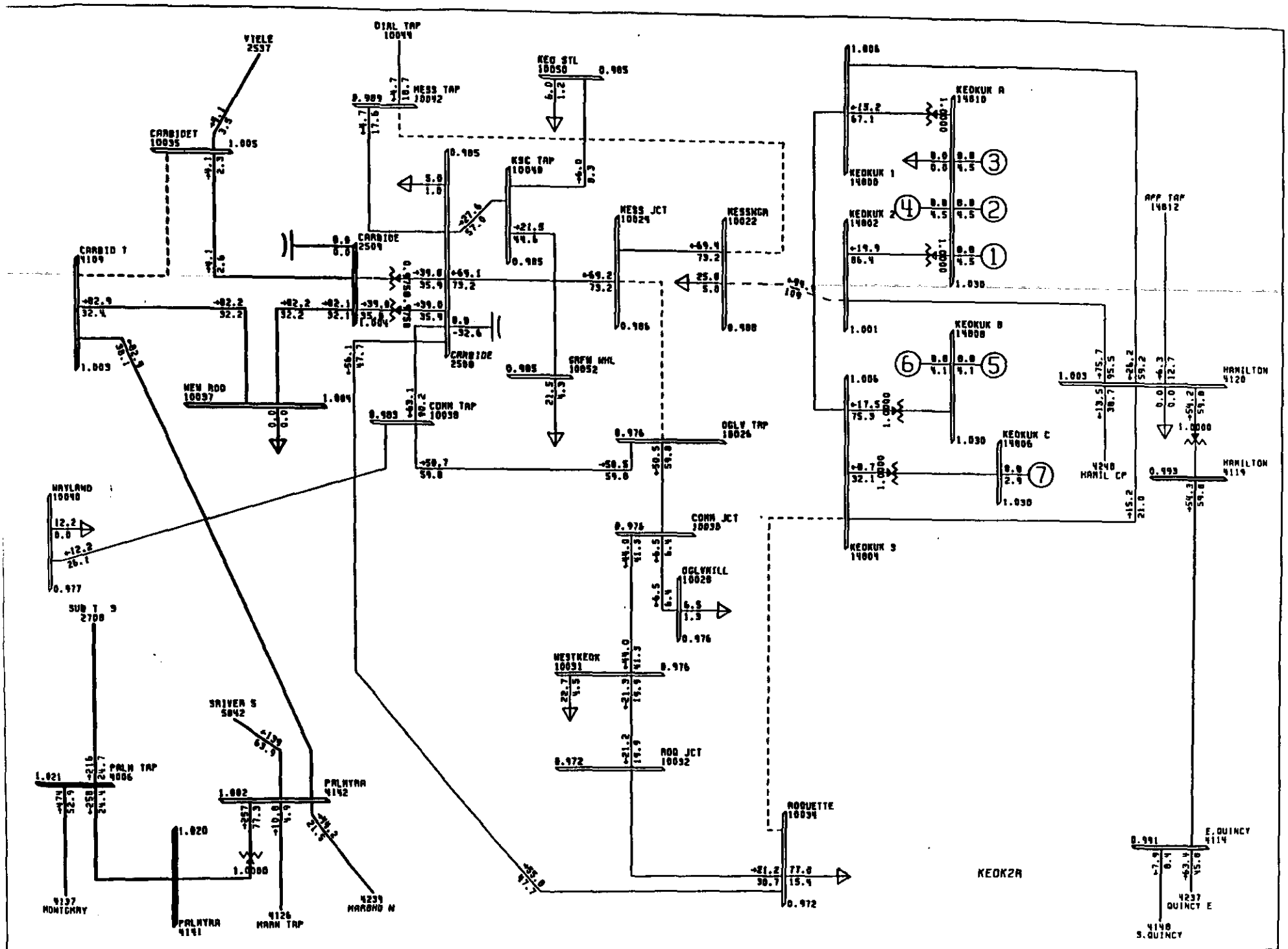

1998B 69KV PLAN, NEW CARB-MESS LINE, 24.3MVAR BGS 69
CONT 1: LOSS OF NEW HYDRO-ROQUETTE LINE

100% RATEA
0.925UV 1.060OV
KV, ≤72 ≤141 ≤167

BUS - VOLTAGE (PU)
BRANCH - MW/% OF RATE A
EQUIPMENT - MW/MVAR

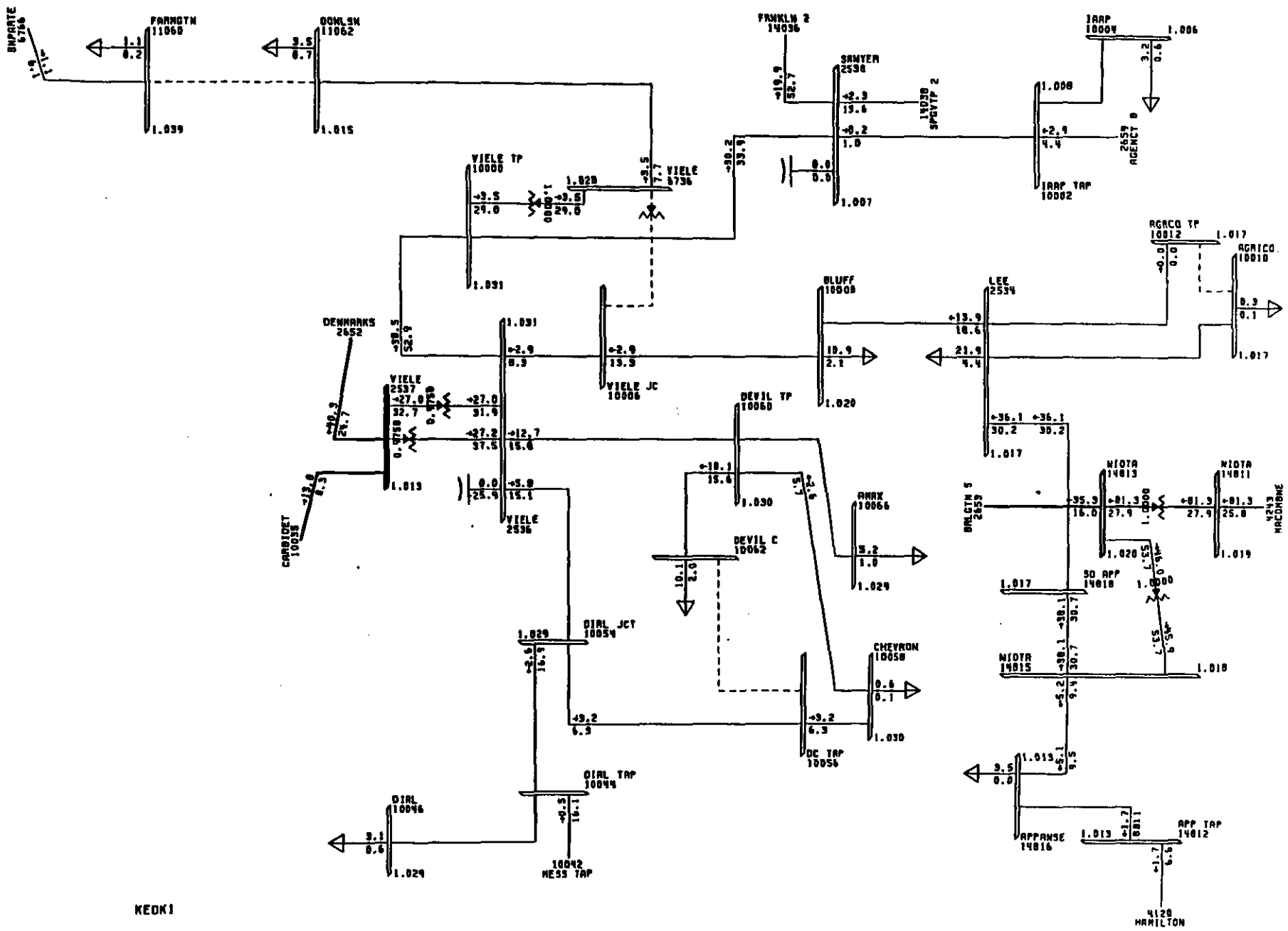

1998B 69KV PLAN, NEW CARB-MESS LINE, 24.3MVAR BGS 69
BASE CASE
FRI, JUN 02 1995 16:00

100% RATEB
0.925 UV 1.060 OV
KV: ≤72 ,≤141 ,≤167

BUS - VOLTAGE (PU)
BRANCH - MW/% OF RATE A
EQUIPMENT - MW/MVAR

POWER TECHNOLOGIES, INC.

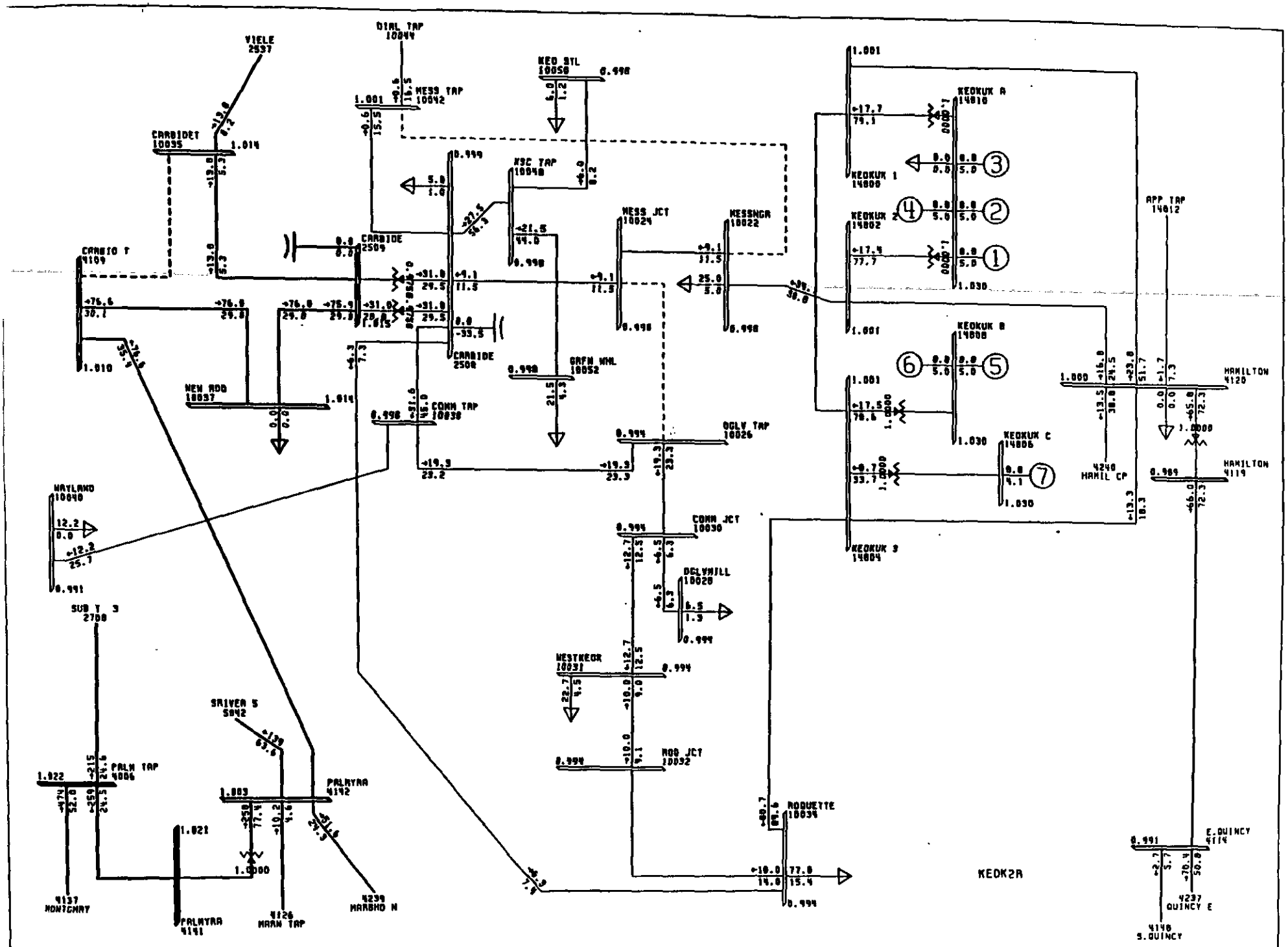

1998B 69KV PLAN, NEW CARB-MESS LINE, 24.3MVAR BGS 69
BASE CASE

100% RATEA
0.925UV 1.060OV
KV:≤72 ≤141 ≤167

BUS - VOLTAGE (PU)
BRANCH - MW/% OF RATE A
EQUIPMENT - MW/MVAR

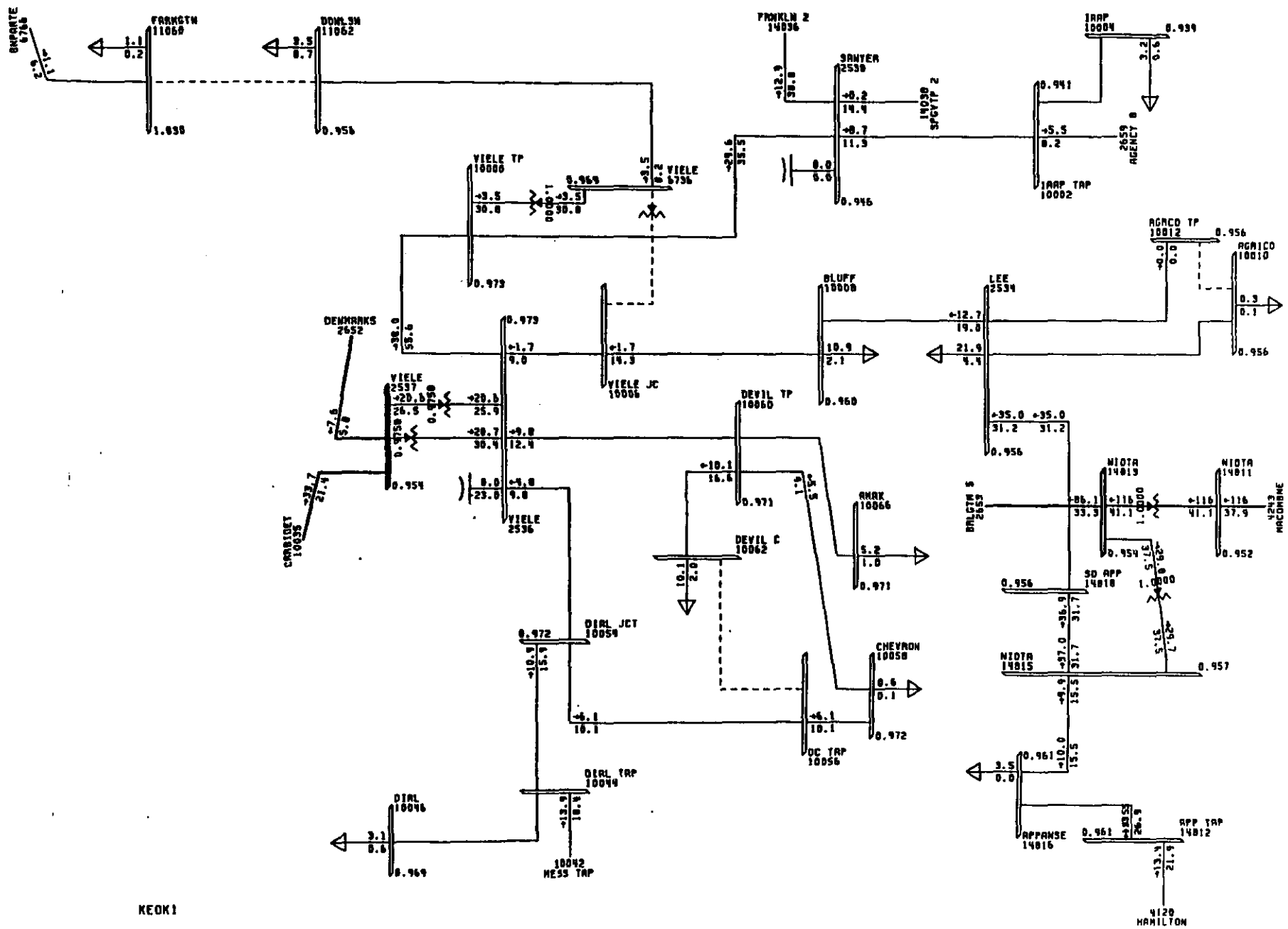

1998B 161KV PLAN, NEW CARB-MESS LINE, 24.3MVAR BGS
CONT 7: BGS OUTAGE
FRI. JUN 02 1995 16:05

100% RATEA
0.925UV 1.060OV
KV:≤72 ,≤141 ,≤167

BUS - VOLTAGE (PU)
BRANCH - MW/% OF RATE A
EQUIPMENT - MW/MVAR

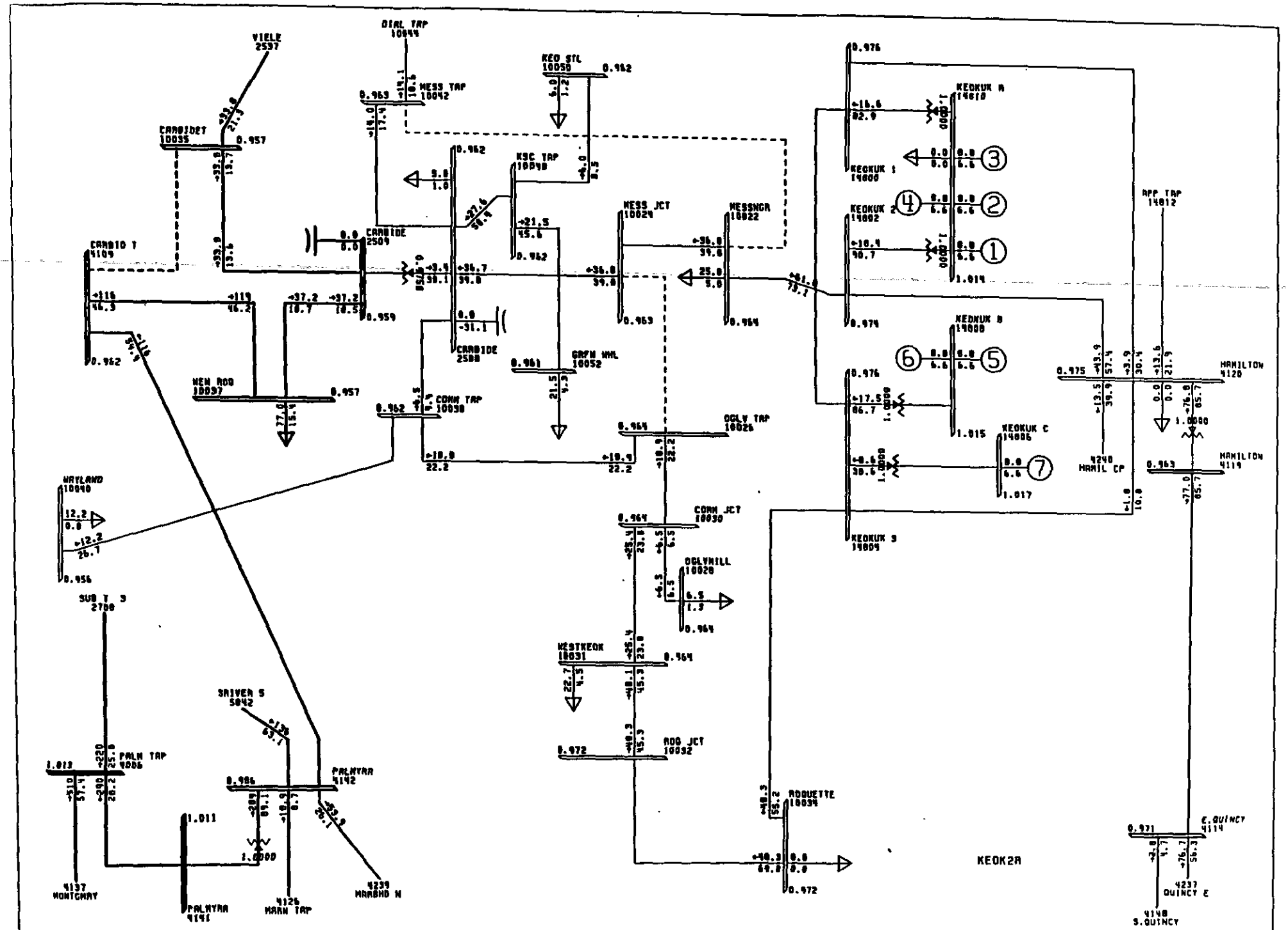

1998B 161KV PLAN, NEW CARB-MESS LINE, 24.3MVAR BGS
CONT 7 BGS OUTAGE

100% RATER
0.925UV 1.060 OV
KV [illegible]

BUS - VOLTAGE (PU)
BRANCH - MW/% OF RATE A
EQUIPMENT - MW/MVAR

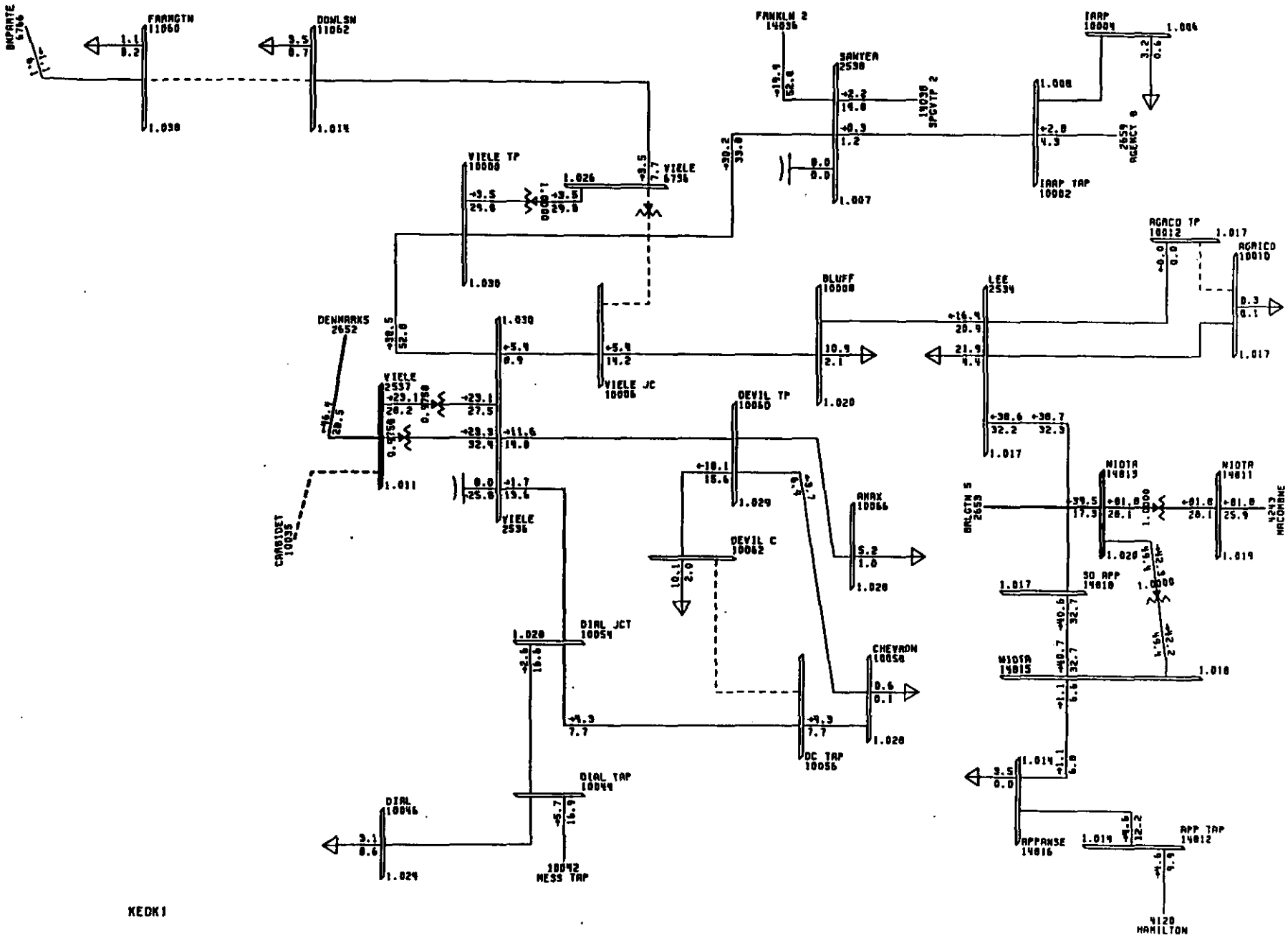

1998B 161KV PLAN, NEW CARB-MESS LINE, 24.3MVAR BGS
CONT 5: LOSS OF CARBIDE - VIELE
FRI, JUN 02 1995 16:04

100% RATEA
0.925UV 1.060OV
KV: ≤72 , ≤141 , ≤167

BUS - VOLTAGE (PU)
BRANCH - MW/% OF RATE A
EQUIPMENT - MW/MVAR

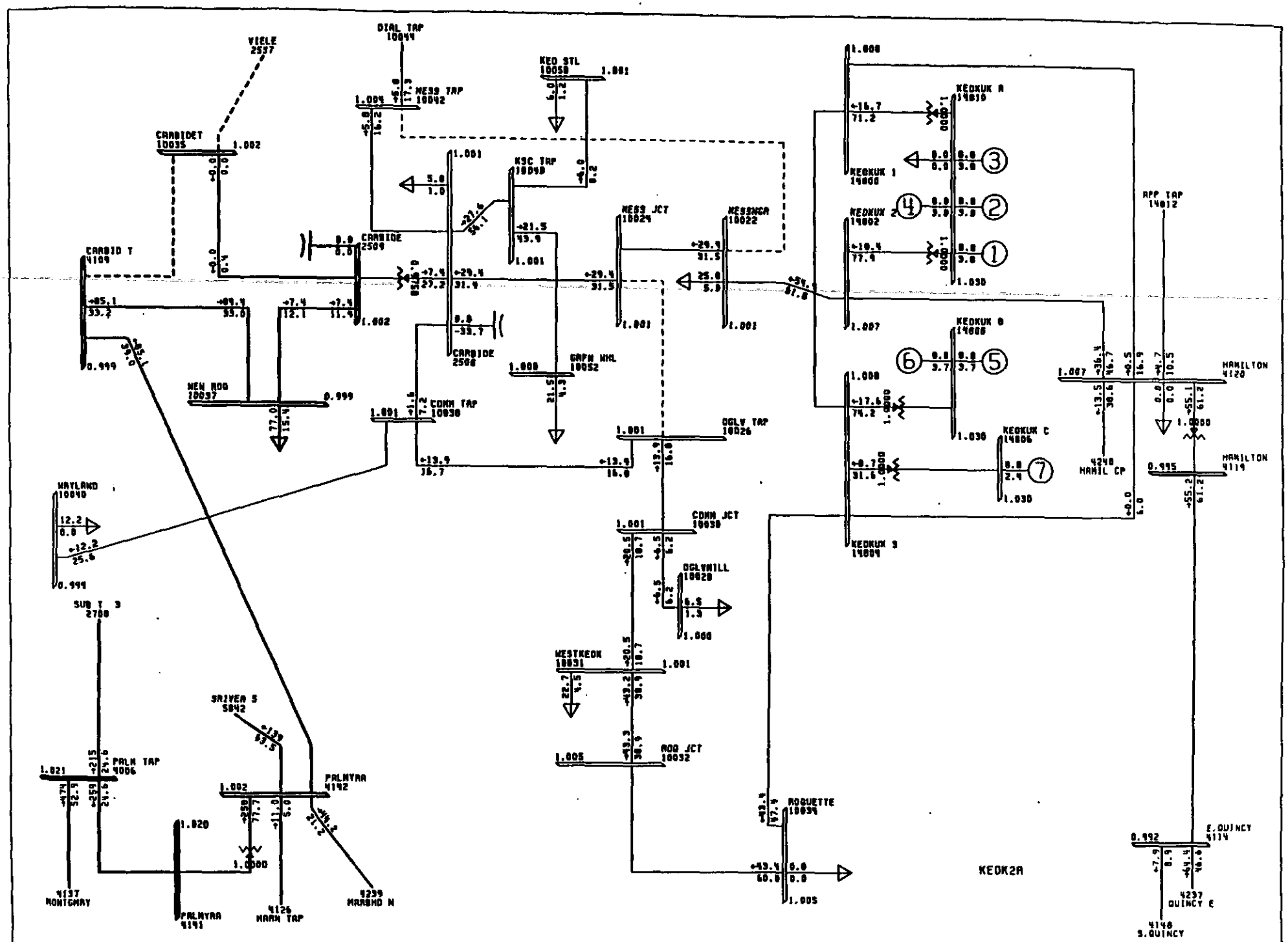

1998B 161KV PLAN, NEW CARB-MESS LINE, 24.3MVAR BGS
CONT 5: LOSS OF CARBIDE - VIELE
JUN 02 1995 16:04

100% RATEA
0.925 UV 1.060 OV
KV: ≤72 , ≤141 , ≤167

BUS - VOLTAGE (PU)
BRANCH - MW/% OF RATE A
EQUIPMENT - MW/MVAR

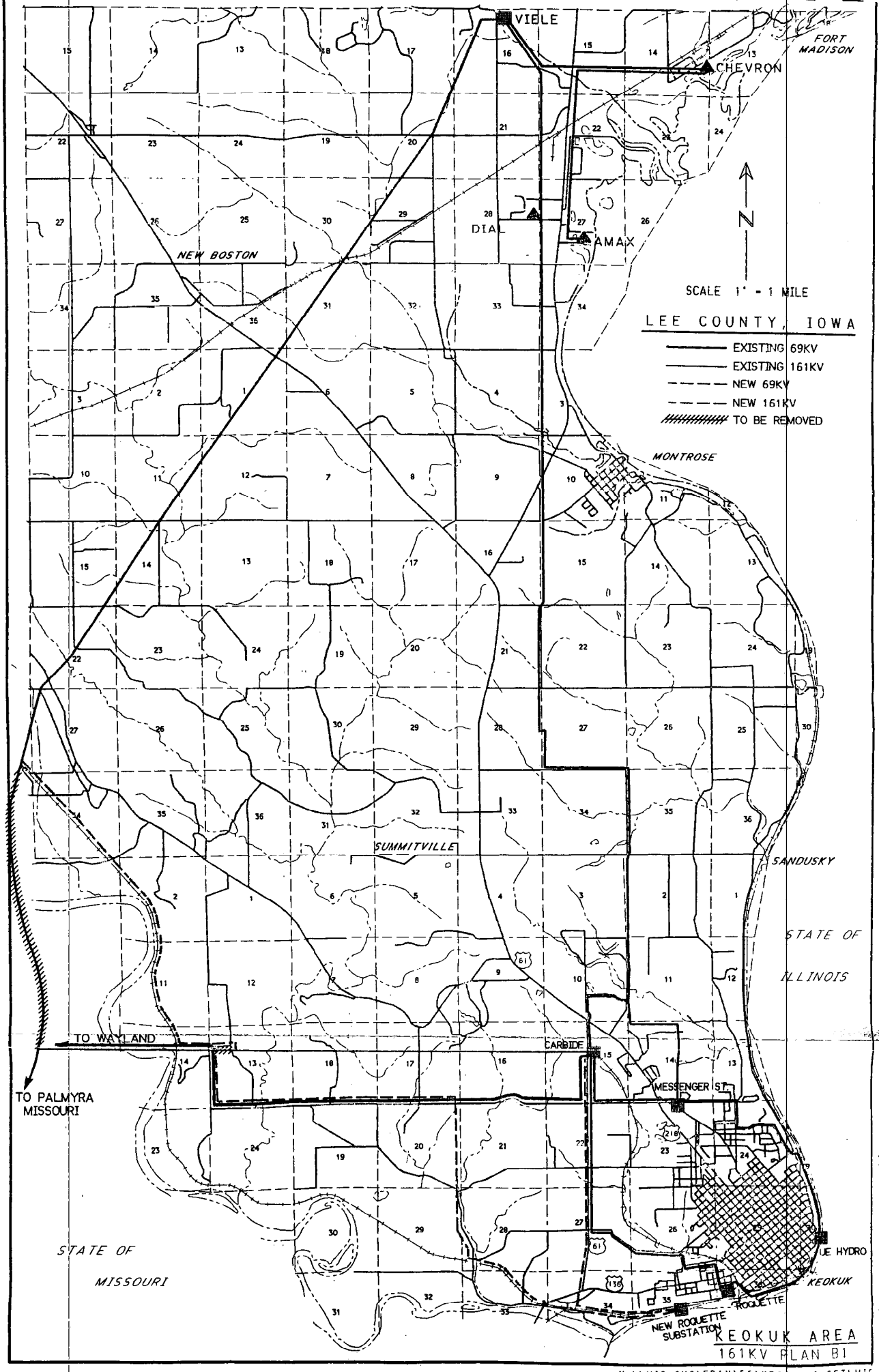
VIELE
CHEVRON
FORT MADISON
DIAL
AMAX
NEW BOSTON
N
SCALE 1" = 1 MILE
LEE COUNTY, IOWA
EXISTING 69KV
EXISTING 161KV
NEW 69KV
NEW 161KV
TO BE REMOVED
MONTROSE
SUMMITVILLE
SANDUSKY
STATE OF ILLINOIS
TO WAYLAND
CARBIDE
MESSENGER ST.
TO PALMYRA MISSOURI
STATE OF MISSOURI
UE HYDRO
KEOKUK
ROQUETTE
NEW ROQUETTE SUBSTATION
KEOKUK AREA
161KV PLAN B1

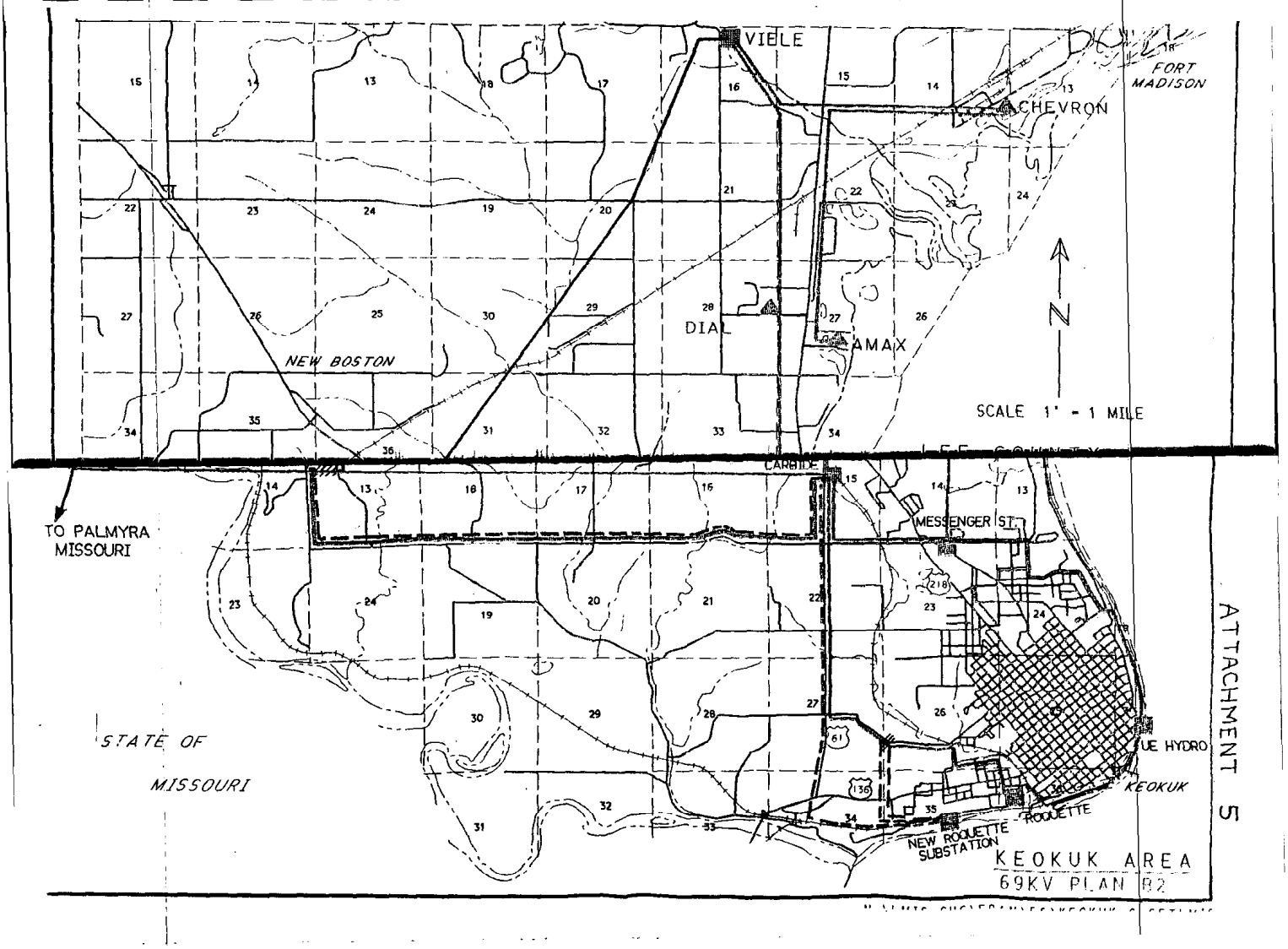

ATTACHMENT 5

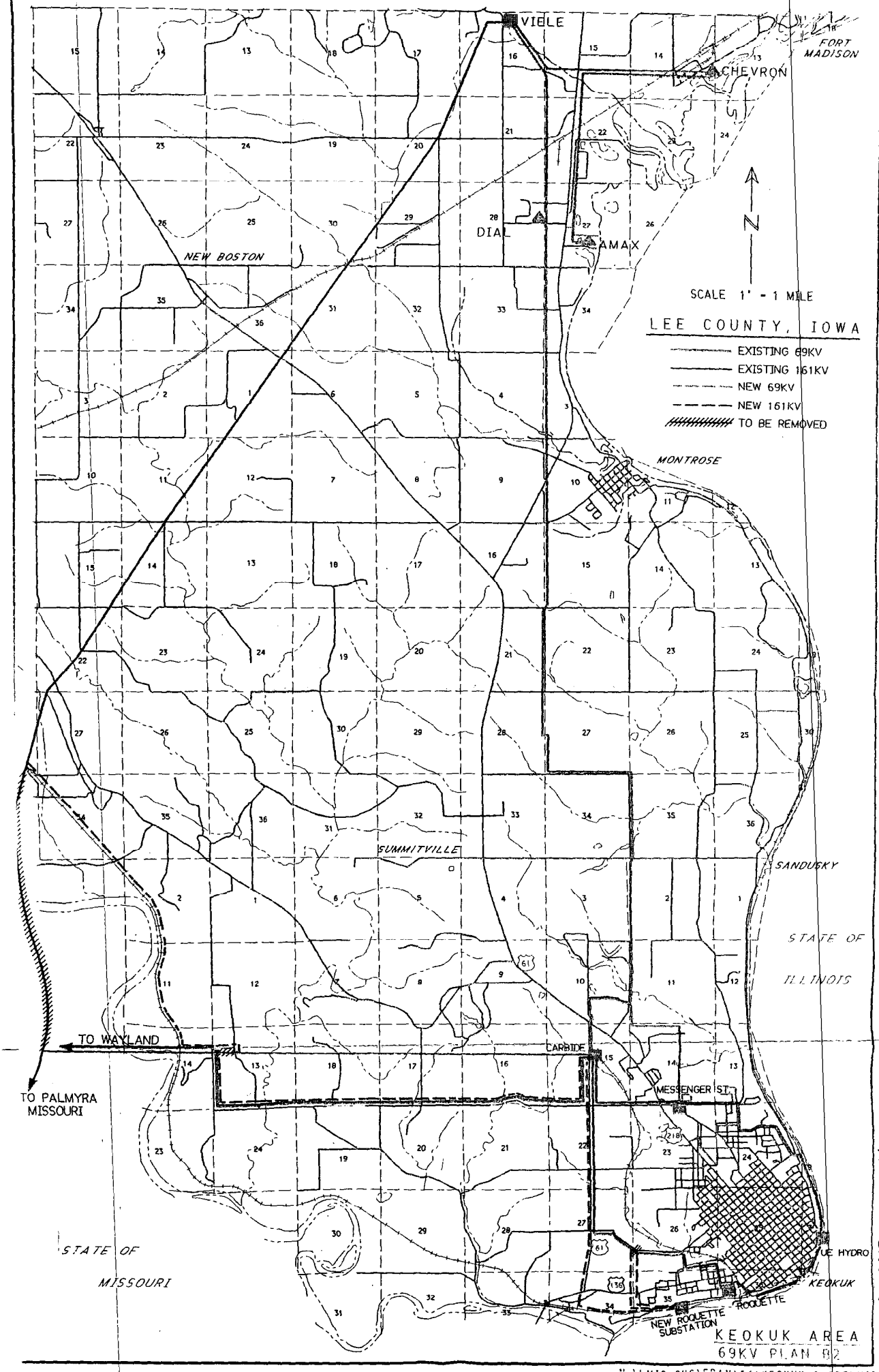

ATTACHMENT 5

ATTACHMENT 6

MEGAWATT LOADS ON THE 69/161KV KEOKUK SYSTEM DUE TO EXPECTED CHANGES ASSOCIATED WITH ROQUETTE, FERROSIL, MIDWEST CARBIDE, TERMINAL SUBSTATION REMOVAL

	1995 (existing)	1996	1998	2006
ROQUETTE	27	34	37	47
FERROSIL	0	16	40	40
MIDWEST CARBIDE	0	0	5	5
TERMINAL SUB REMOVAL	0*	0*	7.9**	7.9**

* - Terminal sub load is not currently on the 69 or 161kv system in Keokuk therefore it is shown as 0 load.

** - The 7.9mw of expected load to be transferred when Terminal sub is removed has been split between Messenger and West Keokuk for modeling purposes.

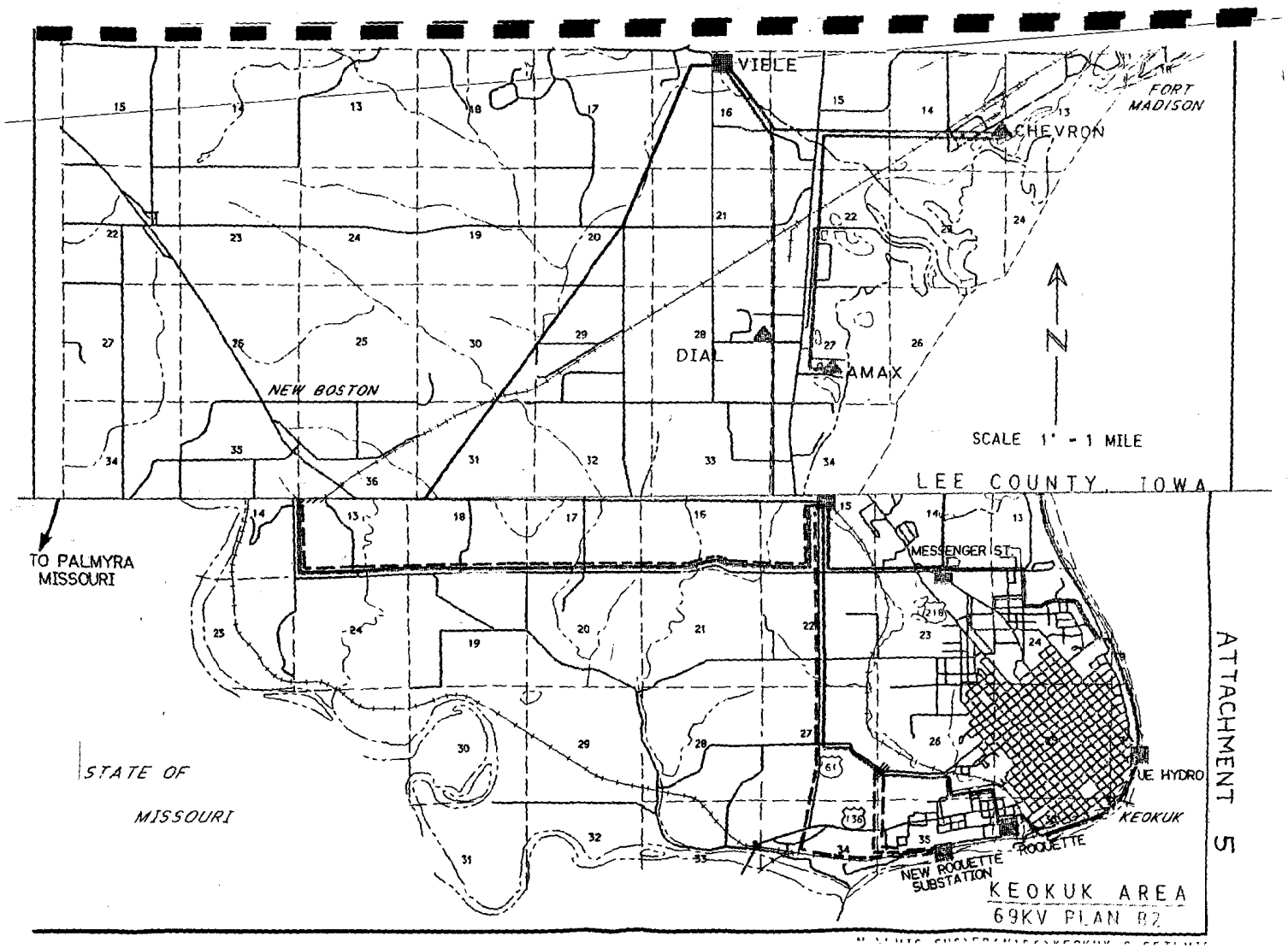

ATTACHMENT 5